NATO Explosive Ordnance Disposal
Centre of Excellence - Slovak Republic

FORMER WARSAW PACT AMMUNITION HANDBOOK

VOLUME 1 Part II
Land Forces Ammunition

Mines, Explosives, Submunition and Grenades

TRENČÍN 2016

For Official Use Only

FORMER WARSAW PACT AMMUNITION HANDBOOK

VOLUME 1 Part II
Land Forces Ammunition

–

Mines, Explosives, Submunition and Grenades

The NATO Explosive Ordnance Centre of Excellence (NATO EOD COE) supports the efforts of the Alliance in the areas of training and education, information sharing, doctrine development and concepts validation.

Published by

NATO EOD Centre of Excellence

Ivana Olbrachta 5, 911 01, Trenčín, Slovak Republic

Tel. + 421 333 502, Fax + 421 960 333 504

www.eodcoe.org

A Book of Papers – Former Warsaw Pact Ammunition Handbook VOL 1 Part II

ISBN 978-80-89261-56-7

© EOD Centre of Excellence. All rights reserved
2016

No part of this book may be used or reproduced in any manner without the written permission of the publisher, except in the case brief quotations embodied in articles and reviews.

INTRODUCTION

1.1 Purpose

With the view of to extend the Volume I, the additional ammunition has been collected and added to this second part of Volume I. This FWP handbook contained herein the information, guidance and technical parameters of selected land forces ammunition.

1.2 Scope

This handbook is a second part of the Volume I of the FWP handbooks. This second part contains general information about mines, explosives, submunition, information about hand grenades, and charges.

The Volume II of the FWP handbooks deals with rocket and missiles, artillery rocket and light antitank weapons. The Volume III of the FWP handbooks has technical parameters of the selected air forces ammunition such as aerial projectiles, bombs, rockets and missiles.

1.3 Distribution and using

This handbook is published as an electronic document for participants of courses and other ammunition specialists.

In case you discover some formal or technical irregularities concerning the content of FWP handbooks, please address this to the editorial team. Your comments are well appreciated and will be incorporated to the new document edition.

Explosive Ordnance Disposal Centre of Excellence authorizes official use of this handbook for Former Warsaw Pact Ammunition Course with the principles “For Officially Use Only”.

No part of this book may be used or reproduces in any manner without the written permission of the publisher, except in the case brief quotations embodied in articles and reviews.

Family Type of Munition				
Family	**Air Launched Munition (ALM)**	**Surface Launched Munition (SLM)**	**Underwater Launched Munition (ULM)**	**Hand Emplaced Munition (HEM)**
Type	o bombs o clusters o clusters bomb unit o depth charges o aircraft gun ammunition* o dispensers o mines o guided missiles o submunition o rockets o torpedoes o cartridge and propellant actuated devices o electro-explosive devices warheads, pyrotechnics	o artillery o mortars o small arms o rifle launched grenades o special launched grenades, light antitank weapons o land mines o guided missiles o submunition o rockets o ballistic missiles o IEDs o cartridge and propellant actuated devices o electro-explosive devices warheads, pyrotechnics	o sea mines o ballistic missiles o torpedoes o cartridge and propellant actuated devices o electro-explosive devices o warheads, pyrotechnics	o hand grenades o demolition charges o land mines o IEDs o electro-explosive devices warheads, pyrotechnics
	o * Base on AOP-38 the aircraft gun ammunition is excluded from ALM family			

TECHNICAL PARAMETERS
OF THE SELECTED FWP AMMUNITIONS

The ammunitions list:

Annex	Original short name	English description	Page
1.	PT-Mi-BA	Anti-Tank Blast Mine in a Bakelite Body	8
2.	TM-72	Anti-Tank Blast Mine in a Metal Body	10
3.	DM-11	Anti-Tank Blast Mine in a Plastic Body	12
4.	Model 1951	Anti-Tank Blast Mine in a Plastic Body	14
5.	DM-12 / PARM -1	Anti-Tank Shaped Charge Mine - Directional	16
6.	PARM -2	Anti-Tank Shaped Charge Mine - Directional	18
7.	MS - 64	Anti- Vehicles Blast Mine in a Metal Body	20
8.	PMK-1	Anti- Transport Blast Mine	22
9.	MPP-61	Anti-Tank Blast Mine in a Plastic Body	24
10.	MKU (UMK-2)	Anti-Tank Mine Blast in a Metal Body	26
11.	TM-35 (TM-35M)	Anti-Tank Blast Mine in a Metal Body	28
12.	TM-41	Anti-Tank Blast Mine in a Metal Body	30
13.	TM-46 (TMN-46)	Anti-Tank Mine Blast in a Metal Body	32
14.	TM-53	Anti-Tank Blast Mine in a Metal Body	34
15.	TM-57	Anti-Tank Mine Blast in a Metal Body	36
16.	TM-62 M	Anti-Tank Mine Blast in a Metal Body	38
17.	MPP-B	Anti-Tank Blast Mine in a Plastic Body	40
18.	TM-62P [TM-62П]	Anti-Tank Blast Mine in a Plastic Body	42
19.	TM-62 P2	Anti-Tank Blast Mine in a Plastic Body	44
20.	TM-62 P3	Anti-Tank Blast Mine in a Plastic Body	46
21.	TM-62B	Anti-Tank Blast Mine in a Paper Body	48
22.	TM-62B	Anti-Tank Blast Mine in a Plastic Body	50

23.	TM-62T	Anti-Tank Blast Mine in a Canvas Housing	52
24.	TM-62D	Anti-Tank Blast Mine in a Wooden Body	54
25.	TMK-2	Anti-Tank Shaped Charge Mine in a Metal Body	56
26.	TM-83	Anti-Tank Shaped Charge Directional Mine in a Metal Body	58
27.	TM-89	Anti-Tank Shaped Charge Mine in a Metal Body	60
28.	PTM 80 P	Anti-Tank Blast Mine in a Plastic Body	62
29.	TMD-44	Anti-Tank Blast Mine in a Wooden Body	64
30.	TMD-B	Anti-Tank Blast Mine in a Wooden Body	66
31.	TYPE-72	Anti-Tank Blast Mine in a Metal (Plastic) Body	68
32.	PM-60	Anti-Tank Blast Mine in a Plastic Body	70
33.	YAM-5	Anti-Tank Blast Mine in a Wooden Body	72
34.	MPB-ZN	Anti- tank Shaped Charge Mine - Directional	74
35.	MPB-ZK	Anti- tank Shaped Charge Directional Mine	76
36.	MAT-62B	Anti-Tank Blast Mine in a Plastic Body	78
37.	MAT -76	Anti-Tank Blast Mine in a Plastic Body	80
38.	TMA-1A	Anti-Tank Blast Mine in a Plastic Body	82
39.	PT-56	Anti-tank Blast Mine in a Plastic Body	84
40.	TMA-2	Anti-tank Blast Mine in a Plastic Body	86
41.	TMA-3	Anti-tank Blast Mine in a Plastic Body	88
42.	TMA-4	Anti-tank Blast Mine in a Plastic Body	90
43.	TMA- 5	Anti-tank Blast Mine in a Plastic Body	92
44.	TMM (TMM-1)	Anti-tank Blast Mine in a Metal Body	94
45.	TMRP-6	Anti-tank Shaped Charge Mine in a Plastic Body	96
46.	MN-111	Anti-tank Shaped Charge Mine in a Metal Body	98
47.	MN-121	Anti-tank Shaped Charge Mine in a Metal Body	100
48.	MN-123	Anti-tank Shaped Charge Mine in a Metal Body	102

49.	MR-123	Anti-tank Shaped Charge Mine in a Metal Body	104
50.	KB – PTM (ABABEEL)	Anti-tank Shaped Charge Mine in a Metal Body	106
51.	KB-1	Dual Purpose Submunition - DPICM	108
52.	KB-2	Dual Purpose Submunition – DPICM Metal Body	110
53.	PTM -3	Anti-tank Shaped Charge Mine in a Metal Body	112
54.	PTM -1S (PGMDM)	Anti-tank Blast Mine in a Plastic Body	114
55.	MS-3	Anti-Personnel Blast Mine in an Plastic Body	116
56.	PMN	Anti-Personnel Blast Mine in an Plastic Body	118
57.	PMN-2	Anti-Personnel Blast Mine in a Plastic Body	120
58.	PMP	Anti-Personnel Fragm. Mine in a Metal Body	122
59.	OZM -3	Anti-Personnel Fragm. Mine in a Metal Body	124
60.	OZM -4	Anti-Personnel Fragm. Mine in a Metal Body	126
61.	OZM -72	Anti-Personnel Fragm. Mine in a Metal Body	128
62.	OZM -152	Anti-Personnel Fragm. Mine in a Metal Body	130
63.	OZM -160	Anti-Personnel Fragm. Mine in a Metal Body	132
64.	MON -50	Anti-personnel Fragm. Mine in a Plastic Body	134
65.	MON -60	Anti-personnel Fragm. Mine in a Plastic Body	136
66.	MON -100	Anti-Personnel Fragm. Mine in a Metal Body	138
67.	MON -200	Anti-Personnel Fragm. Mine in a Metal Body	140
68.	PMD-6M (PMD-6)	Anti-personnel Blast Mine in a Wooden Body	142
69.	POMZ-2 (POMZ-2M)	Anti-personnel Fragm. Mine in a Metal Body	144
70.	ZAB-2,5	Incendiary Submunition in a Metal Body	146
71.	PFM -1 (PFM-1S)	Anti-personnel Blast Mine in a Plastic Body	148
72.	POM -1 S	Anti-Personnel Fragm. Mine in a Metal Body	150
73.	POM -2 S	Anti-Personnel Fragm. Mine in a Metal Body	152
74.	AO-2.5 RT	Anti-personnel Fragm. Submun. in a Metal Body	154

75.	AOB-2.5 RT	Anti-personnel Fragm. Submun. in a Metal Body	156
76.	PSM-1	Anti-personnel Fragm. Mine in a Metal Body	158
77.	Type - 58	Anti-personnel Fragm. Mine in a Metal Body	160
78.	MBV78A1	Anti-personnel Fragm. Mine in a Metal Body	162
79.	MBV78A2	Anti-personnel Fragm. Mine in a Metal Body	164
80.	MD 82 B	Anti-personnel Blast Mine in a Plastic Body	166
81.	Type-69	Anti-personnel Fragm. Mine in a Metal Body	168
82.	P – 40 Ball (Apple)	Anti-personnel Fragm. Mine in a Metal Body	170
83.	40 mm improvised	Anti-personnel Fragm. Mine in a Metal Body	172
84.	PROM -1	Anti-personnel Fragm. Mine in a Metal Body	174
85.	PMR -1	Anti-personnel Fragm. Mine in a Metal Body	176
86.	PMR -2	Anti-personnel Fragm. Mine in a Concrete Body	178
87.	PMR-2A	Anti-personnel Fragm. Mine in a Metal Body	180
88.	PMR -3	Anti-personnel Fragm. Mine in a Metal Body	182
89.	PMA-1A	Antipersonnel Blast Mine in a Plastic Body	184
90.	PMA- 2	Antipersonnel Blast Mine in a Plastic Body	186
91.	PMA- 3	Antipersonnel Blast Mine in a Plastic Body	188
92.	PMR-4	Anti-personnel Fragm. Mine in a Metal Body	190
93.	PPMP - 2	Anti-personnel Fragm. Mine in a Metal Body	192
94.	PMR-U	Anti-personnel Fragm. Mine in a Plastic Body	194
95.	No - 4	Antipersonnel Blast Mine in a Plastic Body	196
96.	MRUD (MRUD 1)	Anti-personnel Fragm. Mine in a Plastic Body	198
97.	DM-31	Anti-personnel Fragm. Mine in a Metal Body	200
98.	DM-11 (DM-11 AP)	Anti-personnel Blast Mine in a Plastic Body	202
99.	GYATA - 64	Anti-personnel Blast Mine in a Plastic Body	204
100.	SPM	Special Blast Mine in a Bakelite Body	206

101.	MZD -60	Special Blast Mine in a Wooden Body	208
102.	VP13 Volturia	Anti-personnel mine fuze system	210
103.	BPM /BPM-2	Special Blast Limpet Mine in a Metal Body	212
104.	ML-7 (МЛ-7)	Special Blast Mine in a Plastic Body	214
105.	VP-11 (ВП -11)	Special Blast Mine in a Plastic Body	216
106.	MS-4 (MC-4)	Special Blast Mine in a Metal Body	218
107.	USS-T	Special Mine Fuze System	220
108.	ADM – 8	Anti-transport Blast Mine – Antirailways	222
109.	CHF-1 / CHF-2	Anti-personnel Special Chemical Mine	224
110.	APM and PPM	Anti-tank Blast Mine	226
111.	MPM	Special Blast Mine in a Bakelite Body	228
112.	MOP-2	Special Signal Mine	230
113.	PŁOMIEŃ 60 (FLASH)	Special Signal Mine in a Metal Body	232
114.	SM	Special Signal Mine in a Metal Body	234
115.	IZMR-11	Special Anti-helicopter Mine in a Metal Body	236
116.	PMR-M85	Special Blast Mine in a Plastic Body	238
117.	TEMP-20	Special Anti-helicopter mine	240
118.	TEMP-20-4	Special Anti-helicopter mine	242
119.	TEMP-30	Special Antitank Top Attack Mine	244
120.	AHM-200-1	Directional Fragmentation Anti-Helicopter Mine	246
121.	4 AHM-100	Directional Fragmentation Anti-Helicopter Mine	248
122.	AO-1SCh	Fragmentation Aerial Bomb - Submunition	250
123.	AO-2,5 and AM-3M	Fragmentation Aerial Bomb - Submunition	252
124.	AO-10-6,5	Fragmentation Aerial Bomb - Submunition	254
125.	PROSAB -1	Aerial Fragmentation Submunition	256
126.	PTAB-1M	Aerial Shaped Charge Bomb-Submunition	258

127.	PTAB-2,5 KO	Aerial Shaped Charge Dual Purpose Bomb-Sub.	260
128.	PTAB-1,5	Aerial Shaped Charge Bomb -Submunition	262
129.	PTAB-2,5	Aerial Shaped Charge Bomb -Submunition	264
130.	9N235	Fragmentation Submunition in a Metal Body	266
131.	TM-100	Standardized Demolition Charge – 100 g	268
132.	TM-200	Standardized Demolition Charge – 200 g	270
133.	TM-500	Standardized Demolition Charge – 500 g	272
134.	130 mm 3DC1	Artillery Marker Projectile	274
135.	UPG-8 (training)	Anti-tank Hand Grenade	276
136.	RPG-6	Anti-tank Hand Grenade in a Metal Body	278
137.	RPG-43	Anti-tank Hand Grenade in a Metal Body	280
138.	AZ-58 –K- 100	Anti-tank Hand Grenade in a Metal Body	282
139.	RKG -3	Anti-tank Hand Grenade in a Metal Body	284
140.	RKG -3 M	Anti-tank Hand Grenade in a Metal Body	286
141.	P.I.R.A	Anti-tank Shaped Charge Hand Grenade	288
142.	RPG-40	Anti-tank Hand Grenade in a Metal Body	290
143.	RPG -41	Anti-tank Hand Grenade in a Metal Body	292
144.	UG - 41	Antitank Hand Grenade in a Metal Body	294
145.	RGD - 33	Anti-personnel Hand Grenade - Defensive	296
146.	RG- 42	Anti-personnel Hand Grenade - Defensive	298
147.	ROG-43	Anti-personnel Hand Grenade in a Metal Body	300
148.	Model 1913 Djakonova	Rifle Launched Antipersonnel Fragm. Grenade	302
149.	RDG model 1914 / 1930	Antipersonnel Fragmentation Hand Grenade	304
150.	Chem. Grenade - 1917	Special Hand Grenade in a Metal Body	306
151.	Incendiary g.1917/1942	Special Hand Grenade in a Metal Body	308
152.	RG-41	Anti-personnel Hand Grenade - offensive	310

153.	URG – N	Anti-personnel Hand Grenade Training	312
154.	RG – N	Anti-personnel Hand Grenade Offensive	314
155.	RG–O	Anti-personnel Fragmentation Hand Grenade	316
156.	RDG -5	Anti-personnel Fragmentation Hand Grenade	318
157.	RG 60 DZ	Special Hand Grenade in a Plastic Body	320
158.	RGO -78	Anti-personnel Fragmentation Hand Grenade	322
159.	RGO-88	Anti-personnel Fragmentation Hand Grenade	324
160.	RGZ- 89	Anti-personnel Fragmentation Hand Grenade	326
161.	UWG-0,1	Underwater Blast Hand Grenade	328
162.	Man Model 39	Anti-personnel Fragmentation Hand Grenade	330
163.	DM-51	Anti-personnel Fragm./ Blast Hand Grenade	332
164.	M-DN-11; M-DN-21; M-DN-31; M-DN-61	Anti-personnel Fragmentation Hand Grenade	334
165.	36 M	Anti-personnel Blast Hand Grenade	336
166.	42 M	Anti-personnel Hand Grenade	338
167.	M 75	Anti-personnel Fragmentation Hand Grenade	340
168.	M50P3	Anti-personnel Fragm. Defensive Hand Grenade	342
169.	M 52P1	Anti-personnel Fragm. Offensive Hand Grenade	344
170.	M 69	Anti-personnel Fragm. Offensive Hand Grenade	346
171.	UITM -60	Anti-Tank Blast Training Mine	348
172.	PP Mi-Na 1	Anti-Tank Blast Training Mine	350

FWP Ammunition

1

AMMUNITION FAMILY HEM

AMMUNITION TYPE	*Land Mine*
DESIGNATION	*Anti-Tank Blast Mine in a Bakelite Body*
NAME/ASSIGNED MARK (original)	***PT – Mi – Ba***
COUNTRY of ORIGIN	*Former Czechoslovakia*

PT – Mi – Ba

total weight of mine with detonators and transport safety device [*kg*]	*7.6*
explosive type	*TNT*
weight of explosive [*kg*]	*6.0*
diameter [*mm*]	*323*
height of body [*mm*]	*102*
dimension of pressure plate [*mm*]	*Diameter 130*
activation force (greater than) [*N*]	*150 -300, 200 - 400*
effect of mine	
type of fuze	*Ro -7-III; Ro-7-II;*
type of additional (anti-lift) fuze	*Ro - 4*

PACKING

Number of rounds in the package	*2*	**Weight of full package [*kg*]**	*18.7*

DESCRIPTION

Antitank blast mine PT-Mi-Ba was developed and produced in former Czechoslovakia. Mine was designed to destroy anti-tank barriers and roadblocks. Mines are sensitive on impact therefore they are placed manually (surface or underground) only. They are used to break the tank tracks or damage the tank chassis. This mine consists of a body, explosive charge, pressure disc, base plug and fuze.

COLOR and MARKING

Body colour:	*Olive colour*
Text colour:	*Black*

FUZE

Type	**Characteristic**
Ro -7-III	*Central fuze - metal, mechanical, pressure, with immediate effect. Fuze is protected to be disarmed.*
R- 7-II	*Central fuze - metal, mechanical, pressure, with immediate effect.*
Ro - 4	*Anti-lift fuze against removing all types of mines with blasting agent of 400 g TNT. Fuze – immediate. Bakelite body and waterproof.*

SAFETY CONSIDERATION THREAT

Simple removal of mine is very dangerous

NOTICE

During arming process is the fuze with the detonator inserted into the mine (removed from the base of the body).

DRAWINGS/CUTAWAY/MARKING/STENCILING:		LEGEND
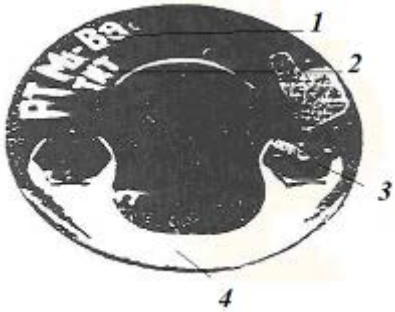	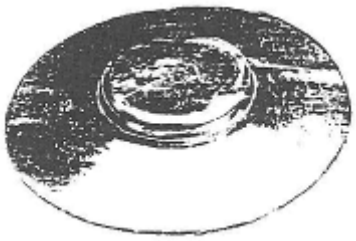	*1 - index of mine 2 - type of explosive; 3 - handle mounting bolts, 4 - handle ; 5 – base part of mine, 6 – fuze well; 7 – mine body. 8 - base plug; 9 – pressure disc ; 10 - top part of mine; 11 – booster charge; 12 – explosive charge; 13 - fuze*
*view mine **PT – Mi – Ba-** base of the mine*	*view mine **PT – Mi – Ba-** top*	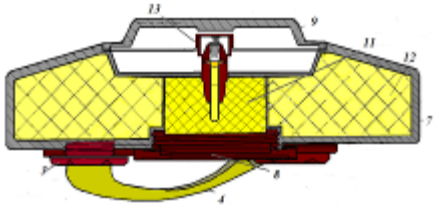 *cross-section of mine*
*view mine **PT – Mi – Ba-** top view*	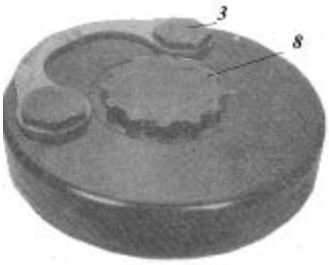 *view mine **PT – Mi – Ba-** base view*	

FWP Ammunition

2

AMMUNITION FAMILY HEM

AMMUNITION TYPE	*Land Mine*
DESIGNATION	*Anti-Tank Shaped Charge Mine in a Metal Body*
NAME/ASSIGNED MARK (original)	***TM-72***
COUNTRY of ORIGIN	*Former USSR*

TM-72	
total weight of mine with detonators and transport safety device [*kg*]	*6*
explosive type	*TNT/RDX*
weight of explosive [*kg*]	*2.5*
diameter [*mm*]	*250*
height of body [*mm*]	*80*
dimension of pressure plate [*mm*]	
activation force (greater than) [*N*]	*150-200 (magnetic fuze - a radius of about 1 m)*
effect of mine	*the penetration of 100 mm the RHA plate on the distance from 0.25 to 0.5 m*
type of fuze	*MVN-72; possible using all types MV-62, MVN-80*
type of additional (anti-lift) fuze	

PACKING

Number of rounds in the package	*4*	**Weight of full package [*kg*]**	*40*

DESCRIPTION

The Antitank mine TM-72 has origin in former USSR. TM-72 can be placed manually or mechanically using devices GMZ or PMZ-4. The shaped charge consists of TNT/RDX (40/60) mixture. The mine can be armed using the following fuzes: Magnetic fuzes MVN-72 and MVN-80, and all types of fuzes MV-62. Range of operating temperature is -40 to +50 °C.

COLOR and MARKING

Body colour:	*Olive*
Text colour:	*Black*

FUZE

Type	**Characteristic**
All types of MV -62	*contact,mechanical. pressure*
MVN-72,MVN-80	*magnetic, non contact*

SAFETY CONSIDERATION THREAT

Simple removal of mine is very dangerous.

NOTICE

Corrosion may weaken the shear pin and then make this mine extremely dangerous to handle; it may also make it impossible to remove the fuze from the fuze well.

DRAWINGS/CUTAWAY/MARKING/STENCILING:	LEGEND
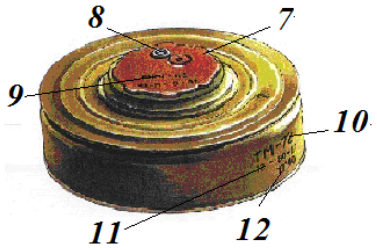 **TM – 72 with fuze MVCz-62**	*1 – booster charge, 2 - explosive charge, 3 - body - stainless steel, 4 - fuze MVN-72, 5 - safety pin, 6 - index of fuze – on side (white color – training fuze); 7 - fuze MVCz -62; 8 - safety pin; 9 - marking of the fuze-type, index of manufacturer, lot and year of manufacture; 10 - marking of the mine - the type of mine; 11 –index of manufacturer, lot and year of manufacture; 12 - the type of explosive (TG 40; TNT / RDX in the ratio of 60: 40); 13 – Shoulder straps; 14 - fuze MVN-72, 15 - marking of fuze-type of the fuze, index of manufacturer, lot and year of manufacture; 16 - the fuze; 17 - the slot for the key and the key to disarm.*
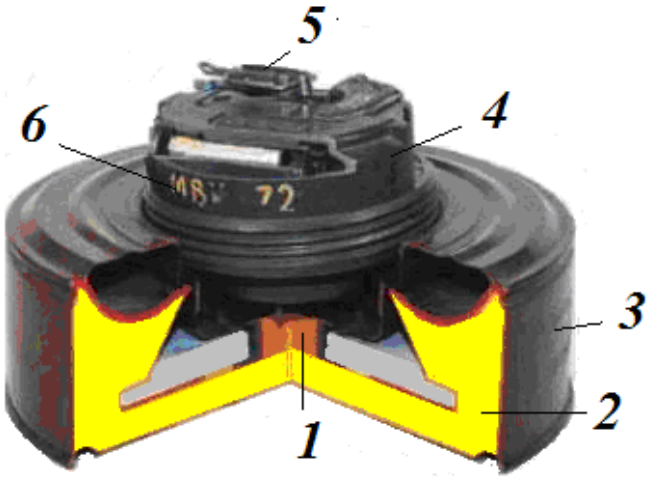	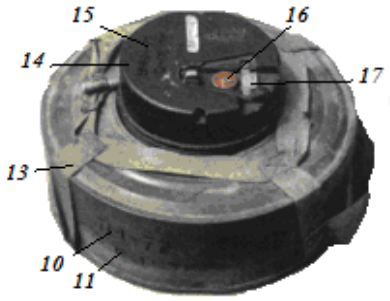 TM – 72 with fuze MVN-72

FWP Ammunition

3

AMMUNITION FAMILY HEM

AMMUNITION TYPE	*Land Mine*
DESIGNATION	*Anti-Tank Blast Mine in a Plastic Body*
NAME/ASSIGNED MARK (original)	*DM-11*
COUNTRY of ORIGIN	*License production in West GERMANY*

DM-11	
total weight of mine with detonators and transport safety device [*kg*]	*7.4*
explosive type	*TNT*
weight of explosive [*kg*]	*7*
diameter [*mm*]	*300*
height of body [*mm*]	*94*
dimension of pressure plate [*mm*]	
activation force greater than [*N*]	*1500*
effect of mine	*70 mm RHA*
type of fuze	*pressure – friction / type DM-56*
type of additional (anti-lift) fuze	*possible – mine has secondary fuze wells*

PACKING

Number of rounds in the package	*4*	**Weight of full package [*kg*]**	*32.2*

DESCRIPTION

Antitank blast mine DM-11 was produced in West Germany. Originally was developed by French company Alsetex (MI AC ID 1951). Mines are placed manually on the surface or underground. Mine is designed to break the tank tracks or damage the tank chassis. Mine is hard detectable by ferromagnetic devices, due to small metal elements. The main explosive is cast into a mold containing wool fibers for reinforcement. The mine body itself is manufactured entirely of explosive and plastic.

COLOR and MARKING

Body colour:	*Olive*
Text colour:	*Black*

FUZE

Type	Characteristic
central TM-56	*mechanical, contact, pressure*
Antilift	*possible – mine has secondary fuze wells*

SAFETY CONSIDERATION THREAT

Simple removal of mine is very dangerous because of its possible provision with anti-lift fuze.

NOTICE

Plastic body and a small amount of metal parts ensure a long the period of effectiveness armed mine.

DRAWINGS/CUTAWAY/MARKING/STENCILING:	LEGEND
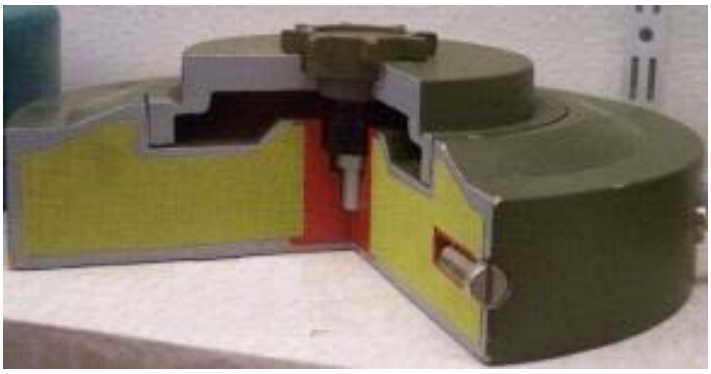 *Mine DM-11 - profile*	*1– body of mine -plastic, 2 – explosive charge, 3 pressure disc; 4 – fuze ; 5 – booster charge; 6 – detonator; 7 – well for the subsidiary fuze (anti-lift); 8 - connector, 9 –dummy fuze; 10 - handle;*
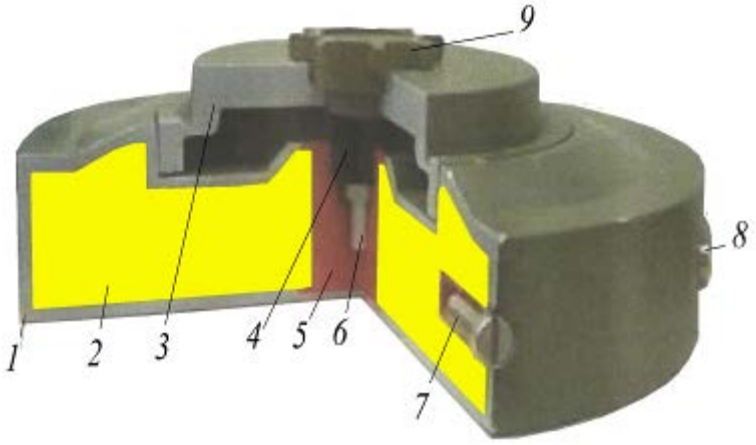	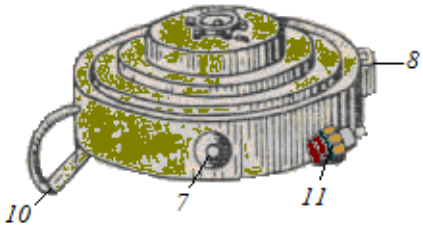

FWP Ammunition

4

AMMUNITION FAMILY HEM

AMMUNITION TYPE	*Land Mine*
DESIGNATION	*Anti-Tank Blast Mine in a Plastic Body*
NAME/ASSIGNED MARK (original)	***Model 1951 (SAE-2)***
COUNTRY of ORIGIN	*FRANCE*

Model 1951 (SAE-2) (MIACID 51)	
total weight of mine with detonators and transport safety device [*kg*]	*7.2*
explosive type	*TNT*
weight of explosive [*kg*]	*7*
diameter [*mm*]	*300*
height of body [*mm*]	*82*
dimension of pressure plate [*mm*]	
activation force greater than [*N*]	*1400*
effect of mine	*60-70 mm RHA*
type of fuze	*model 1950 or model 1952*
type of additional (anti-lift) fuze	*pressure*

PACKING

Number of rounds in the package	*4*	**Weight of full package [*kg*]**	*31.8*

DESCRIPTION

Antitank blast mine Model 1951(SAE-2, or MI AC ID 51) was developed and produced in France. Mine was designed to damage or to destruct the vehicle chassis. It is consist of a fiberglass body, explosive charge and contact pressure fuze. The booby trap wells (parts of the booster housings) and the fuze well plug are plastic. The mines are cast of TNT reinforced with glass wool. Mine is a hardly detectable by ferromagnetic devices (the only metal parts in the mine are the striker and spring).

COLOR and MARKING

Body colour:	*Olive*
Text colour:	*Black*

FUZE

Type	**Characteristic**
model 1950	contact, pressure, chemical
model1952	contact, pressure friction, mechanical,

SAFETY CONSIDERATION THREAT

Simple removal of mine is very dangerous because of its possible provision anti-lift fuze

NOTICE

Fiberglass body and a small amount of metal parts ensure a long period of effectiveness of the armed mine.

DRAWINGS/CUTAWAY/MARKING/STENCILING:	LEGEND
 Profile mine model 1951(SAE-2)	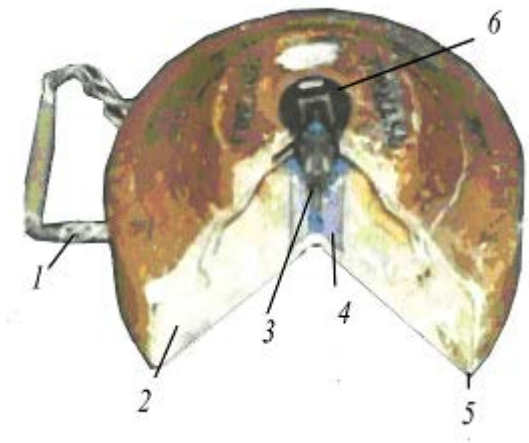
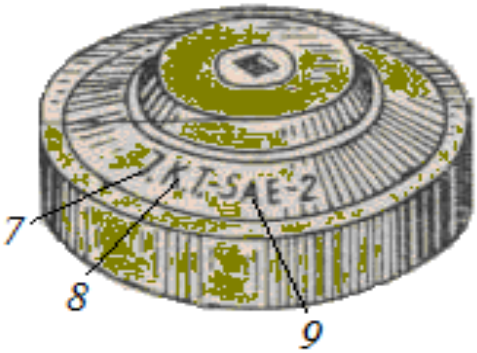	*1 – handle ,* *2 – explosive charge* *3 – fuze;* *4 – booster charge;* *5 – body of mine;* *6 - cork socket fuze;* *7- marking the lot of manufacture;* *8- marking the manufacturer;* *9 – marking the index of mine.*

	FWP Ammunition	**5** **AMMUNITION FAMILY HEM**

AMMUNITION TYPE	*Land Mine*
DESIGNATION	*Anti-Tank Shaped Charge Mine - Directional*
NAME/ASSIGNED MARK (original)	***DM 12 / (PARM-1)***
COUNTRY of ORIGIN	*GERMANY*

DM-12 / PARM-1

total weight of mine with detonators and transport safety device [*kg*]	*10*
explosive type	*Composition B*
weight of explosive [*kg*]	*1.4*
diameter [*mm*]	*128*
height of body [*mm*]	*159*
dimension of pressure plate [*mm*]	
activation force greater than [*N*]	
effect of mine	*Penetration to 600 mm RHA*
type of central fuze	*command by wire, IR sensor package*
type of additional (anti-lift) fuze	

PACKING

Number of rounds in the package	*1*	**Weight of full package [*kg*]**	*16.7*

DESCRIPTION

The antitank directional mine DM12 (PARM 1) was introduced to the service in June 1988. The PARM-1 is mounted on a small tripod. The mine consists of the rocket with a shaped charge warhead and an optical fibre connecting mechanism. The mine is initiated by driving combat vehicles or by infrared sensor. The allowable traverse is 360 degrees with elevation – 45 to + 90 degrees. A reel of fibre optic cable is laid along the aimed line of sight, the timer is activated, and the mine is armed following five minute arming delay. The mine has an effective range from 2 to 40 meters. The rocket velocity is about 120 m/sec.

COLOR and MARKING

Body colour:	*Grey*
Text colour:	*Black*

FUZE

Type	Characteristic
command by wire	*by crushing the fibre optic trigger cable*
fuze	*infrared package sensor*

SAFETY CONSIDERATION THREAT

Simple removal of mine is very dangerous because of its possible provision with anti-handling fuze.

NOTICE

Time to discharge the battery is approx. 40 days.

DRAWINGS/CUTAWAY/MARKING/STENCILING:	LEGEND
Anti-Tank Shaped Charge Mine DM-12 (PARM-1)	

FWP Ammunition

6

AMMUNITION FAMILY HEM

AMMUNITION TYPE	*Land Mine*
DESIGNATION	*Anti-Tank Shaped Charge Mine - Directional*
NAME/ASSIGNED MARK (original)	**PARM -2**
COUNTRY of ORIGIN	*GERMANY*

PARM -2	
total weight of mine with detonators and transport safety device [*kg*]	*20*
explosive type	*Composition B*
weight of explosive [*kg*]	*1.9*
diameter [*mm*]	*Warhead 110*
height of body [*mm*]	*160*
dimension of pressure plate [*mm*]	
activation force greater than [*N*]	
effect of mine	*Penetration to 750 mm RHA*
type of fuze	*type "SAPIR" (infrared sensor);*
type of additional (anti-lift) fuze	

PACKING

Number of rounds in the package	*1*	**Weight of full package [*kg*]**	*16.7*

DESCRIPTION

The antitank directional shaped charged mine PARM 2 is improved DM-12 (PARM 1) incorporating an infrared sensor and an upgraded rocket. Penetration was increased up to 750 mm RHA with a capability against reactive armour. Range – from 4 to 100 m. Activation could be programmed from hours until 30 days.

COLOR and MARKING

Body colour:	*Olive*
Text colour:	*Black*

FUZE

Type	**Characteristic**
activation	*infrared sensor package*
fuze	*Impact sensitive*

SAFETY CONSIDERATION THREAT

Simple removal of mine is very dangerous because of its possible provision with anti-handling fuze.

NOTICE

Time to discharge the battery is approx.30 days.

DRAWINGS/CUTAWAY/MARKING/STENCILING:	LEGEND

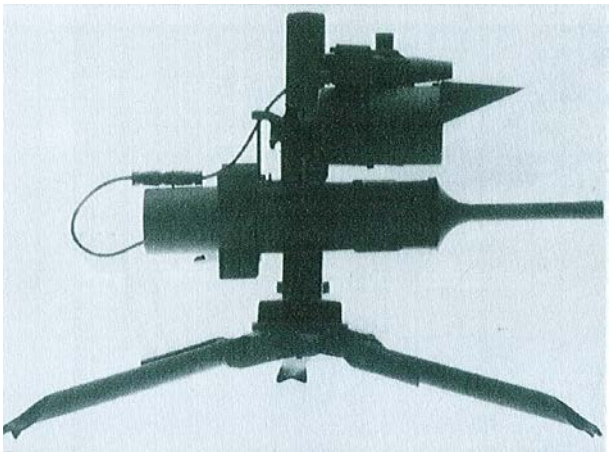

Anti-Tank Shaped Charge Mine PARM-2 with infrared sensor SAPIR

	FWP Ammunition	**7** **AMMUNITION FAMILY HEM**

AMMUNITION TYPE	*Land Mine*
DESIGNATION	*Anti- Vehicles Blast Mine in a Metal Body*
NAME/ASSIGNED MARK (original)	**MS - 64**
COUNTRY of ORIGIN	*POLAND*

MS - 64

total weight of mine with detonators and transport safety device [*kg*]	*3.25*
explosive type	*TNT*
weight of explosive [*kg*]	*2*
height of body [*mm*]	*113*
length of body [*mm*]	*108*
width of body [*mm*]	*250*
dimension of pressure plate [*mm*]	
activation force [*N*]	*250 - 500*
effect of mine	
type of fuze	*pressure type fuze MUND-62 with detonator MD-5M*
type of additional (anti-lift) fuze	*Release - type fuze (type MUV)*

PACKING

Number of rounds in the package	*1*	**Weight of full package [*kg*]**	*4.7*

DESCRIPTION

This type of mine is specially designed to destroy the vehicle chassis systems and can be used as mine on rail and road routes. It is production of Poland and some of the former Warsaw Pact countries as well. It was used during the Balkan conflict and in the conflicts in the Arabic countries. The body is made of steel sheet. In the upper part of the mine is fuze well. The second fuze well for mechanical or electrical fuze is located in a sidewall. On the both sides are arranged four pins that keep the top cover (pressure disc) of the mine at upper position. However, there are the connectors for interconnection mines to a linear charge. The pressure pad retains the cover in the upper position; it is located inside the cover above the explosive charge. The pressure pad is made of deformable plastic material.

COLOR and MARKING

Body colour:	*Olive*
Text colour:	*Black*

FUZE

Type	**Characteristic**
MUND-62	*pressure type of fuze, mechanical, contact*
Detonator	*MD-5M*

SAFETY CONSIDERATION THREAT

Simple removal of mine is very dangerous because a possibility of anti-handling fuze.

NOTICE

If necessary, the mine MS-64 can be interconnected to a linear charge by the connectors located on the body side of mine.

DRAWINGS/CUTAWAY/MARKING/STENCILING:	LEGEND
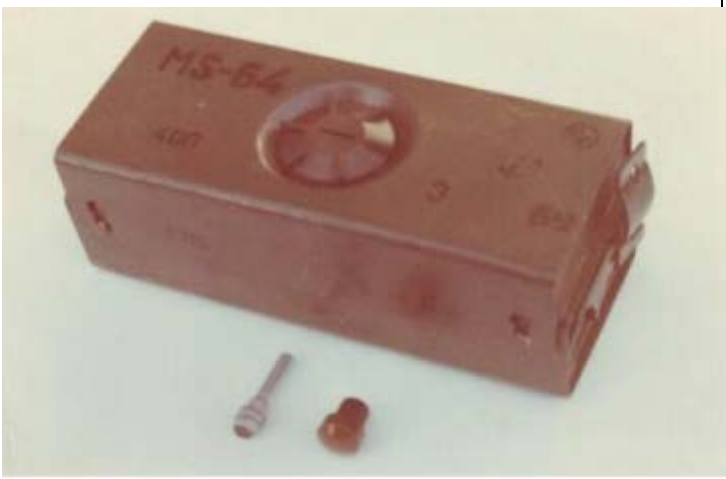	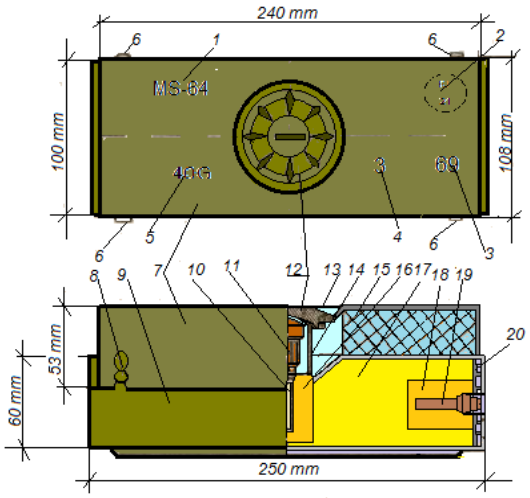
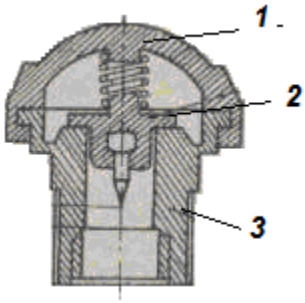 *Mechanism MUND-62* *1 - Pressure cap, 2 - striker, 3 - body*	*1 - Marking the type of mine, 2 – technical control mark (KT and No. of controller), 3 – year of manufacture, 4 – marking the lot of manufacture , 5 - a number of the manufacturer; 6 - connectors; 7 - the top cover of mine, 8 – pin; 9 - body faces; 10 - central detonator (MD-5M); 11 - fuze MUND-62; 12 –plug; 13 - fuze well; 14 - inserting part of fuze well , 15 - pressure plastic pad (insert) 16 - central booster; 17 – explosive charge; 18 – side booster charge; 19. second fuze ; 20 - perforated paper.*

	FWP Ammunition	**8** **AMMUNITION FAMILY HEM**

AMMUNITION TYPE	*Land Mine*
DESIGNATION	*Anti- Train Blast Mine in a Metal Body*
NAME/ASSIGNED MARK (original)	***PMK-1***
COUNTRY of ORIGIN	*Former USSR*

PMK-1	
total weight of mine with detonators and transport safety device [*kg*]	*8.5*
explosive type	*TNT*
weight of explosive [*kg*]	*7.1*
height of body [*mm*]	*115*
length of body [*mm*]	*141*
width of body [*mm*]	*330*
dimension of pressure plate [*mm*]	
activation force greater than [*N*]	
effect of mine	*deflection rails (track) 2 - 5 mm*
type of central fuze	*ZK-1; (with detonator MD-5M)*
type of additional (anti-lift) fuze	*Tension-release type of fuze (type MUV; ERG)*

PACKING			
Number of rounds in the package	*1*	**Weight of full package [*kg*]**	*10.7*

DESCRIPTION

Anti-train blast mine PMK - 1 was developed and produced in former USSR. The mine is specifically designed for railway trains. The mine consists of large amount of explosive and an adequate fuze. Mine body is made of steel sheet. In the upper part of the mine is the fuze well with fuze. The second fuze well for mechanical or electrical fuze is located on a sidewall. On the both sides of the body are arranged four pins that keep the top cover (pressure plate) of mine at upper position. However, there are the connectors for connection the mine to a linear charge. The pressure pad (insert) retains the cover in the upper position is located inside the cover above the explosive. The pressure pad is made of deformable plastic material. Construction resembles to mine MS-64.

COLOR and MARKING	
Body colour:	*Olive*
Text colour:	*Black*

FUSE	
Type	**Characteristic**
ZK-1	*The fuze ZK – 1 is mechanical pressure type of fuze.*
MUV; ERG	*Tension - release type fuze, contact, mechanical,*

SAFETY CONSIDERATION THREAT

Simple removal of mine is very dangerous due to possible antihandling fuze.

NOTICE

If necessary, the mine can be interconnected to a linear charge by the connectors located on the body side of mine. Fuze ZK-1 after arming is indelible, it is recommended to destroy on site.

DRAWINGS/CUTAWAY/MARKING/STENCILING:	LEGEND

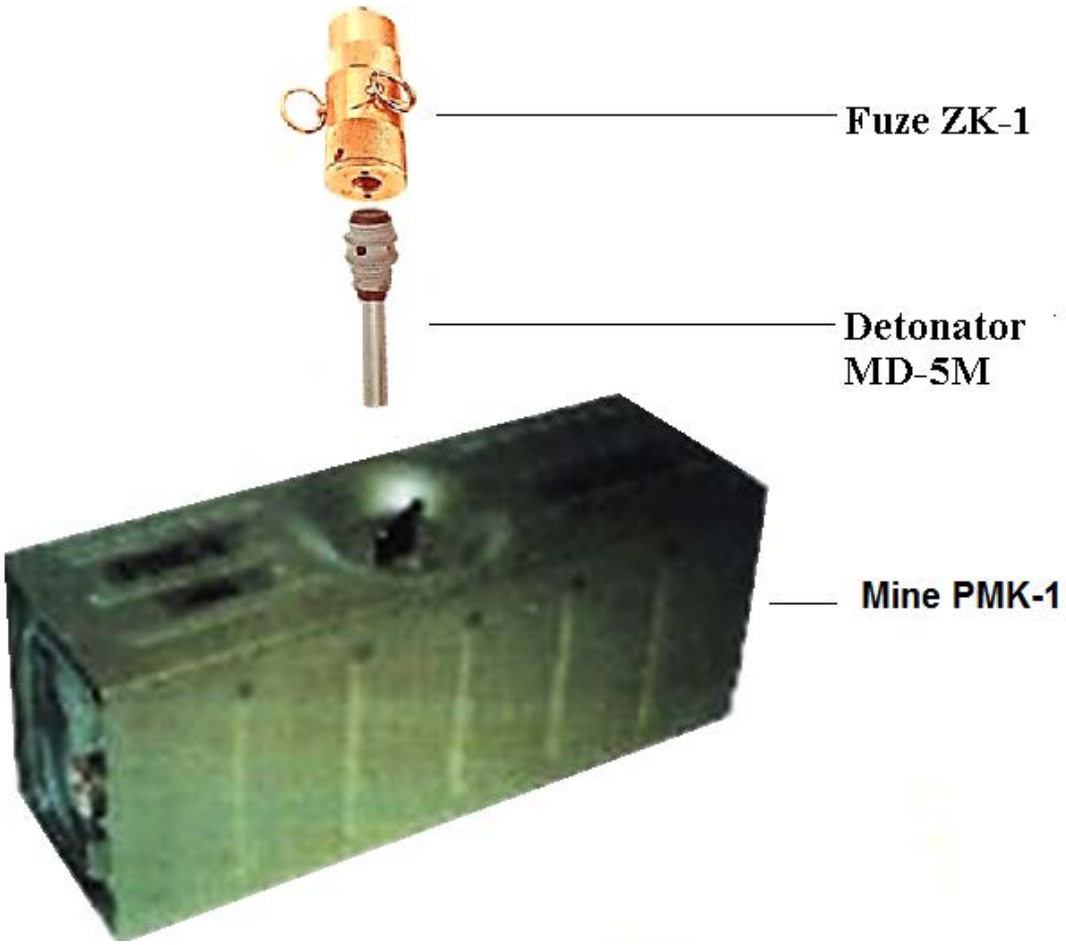

FWP Ammunition

9

AMMUNITION FAMILY HEM

AMMUNITION TYPE	*Land Mine*
DESIGNATION	*Anti-Tank Blast Mine in a Plastic Body*
NAME/ASSIGNED MARK (original)	**MPP-61;**
COUNTRY of ORIGIN	*POLAND;*

MPP-61

total weight of mine with detonators and transport safety device [*kg*]	*10. 0*
explosive type	*TNT*
weight of explosive [*kg*]	*6.35*
diameter [*mm*]	*328*
height of body [*mm*]	*77*
dimension of pressure plate [*mm*]	*Diameter 160*
activation force greater than [*N*]	*500 - 1600*
effect of mine	
type of central fuze	*MUND-62 with detonator ZOD (time delay of the outbreak 1.2 or 3 seconds).*
type of additional (anti-lift) fuze	*type MUV; ERG*

PACKING

Number of rounds in the package	*4*	**Weight of full package [*kg*]**	*48*

DESCRIPTION

Antitank blast mine MPP-61 has ebonite body. The mine was used in the former Warsaw Pact countries, exported to the Middle East Arab countries and Africa. It is difficult to detect by ferromagnetic detectors.
Marking: specification of the mine type, year of manufacture, and manufacturer sign is marked on the mine sidewall by black colour. Practice mine is marked by white colour with a white stripe.

COLOR and MARKING

Body colour:	*Olive*
Text colour:	*Black or White (Practice)*

FUZE

Type	**Characteristic,**
MUND-62	*Mechanical, contact, pressure (with detonator ZOD-1; ZOD-2; ZOD- 3)*
type MUV; ERG	*Tension - release type fuze*

SAFETY CONSIDERATION THREAT

Simple removal of mine is very dangerous due to possibility of using the antilift fuze.

NOTICE

Corrosion may weaken the shear pin, this make mine extremely dangerous to handle; it may also make impossible to remove the fuze from mine. Not detectable by the ferromagnetic device.

DRAWINGS/CUTAWAY/MARKING/STENCILING:	LEGEND
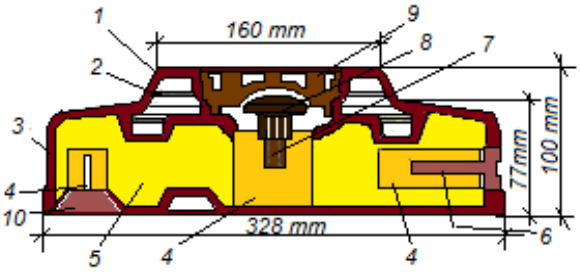	*1 – pressure disc; 2 - rubber seal, 3 – body of mine; 4 – booster charge; 5 – explosive charge; 6 - additional fuze well; 7 - detonator; 8 – mechanism of the fuze; 9 – cork of fuze; 10 - base fuze well* *detonator (ZOD)*
 Mine MPP-61- Practice	 *Mine MPP-61 – battle*

FWP Ammunition

10

AMMUNITION FAMILY HEM

AMMUNITION TYPE	*Land Mine*
DESIGNATION	*Anti-Tank Shaped Charge Mine in a Metal Body*
NAME/ASSIGNED MARK (original)	**MKU**
COUNTRY of ORIGIN	*POLAND*

MKU

total weight of mine with detonators and transport safety device [*kg*]	*10.0*
explosive type	*TNT*
weight of explosive [*kg*]	*5.5*
diameter [*mm*]	*252*
height of body [*mm*]	*226*
dimension of pressure plate [*mm*]	
activation force greater than [*N*]	*1500-3000 (250 fuze PZP-MTU)*
effect of mine	*Penetration to 50 mm RHA*
type of fuze	*ZE-MKU; PZP-MTU; MV-5P*
type of additional (anti-lift) fuze	

PACKING

Number of rounds in the package	*1*	**Weight of full package [*kg*]**	*12*

DESCRIPTION

Antitank shaped charge mine MKU (version UMK -2) has a cylindrical steel body. The mine was produced in Poland. The mine has shaped charge of 5.5 kg TNT. Tilt rod fuze - PZP-MTU causes an explosion under the armoured vehicles, the fuze MV-5P with primer explosive MD-2 under the tracks of vehicles.

Possible applications mine MKU:

- *Placing of anti-tank. minefields against tracks of the vehicles or against the bottom of the vehicles*
- *Placing of minefields against an amphibious vehicles in the coastal waters in depth 30 - 150 cm;*
- *Shaped explosive charges (electric fuze), which penetrate 50 mm RHA plate or 70 cm wall of reinforced concrete from 50 cm distance .*

COLOR and MARKING

Body colour:	*Olive*
Text colour:	*Black. White (Practice)*

FUZE

Type	**Characteristic**,
MV-5P	*Mechanical, contact, pressure; detonator MD -2*
PZP-MTU	*Contact, mechanical tilt rod having a breaking (15^0);*
ZE-MKU	*Electrical, non contact,*

SAFETY CONSIDERATION THREAT

Mine is very sensitive. Removal of mines is very dangerous.

NOTICE

Destruction of found mine is either by setting up explosive charge (explosives) or by trawls.

DRAWINGS/CUTAWAY/MARKING/STENCILING:	LEGEND
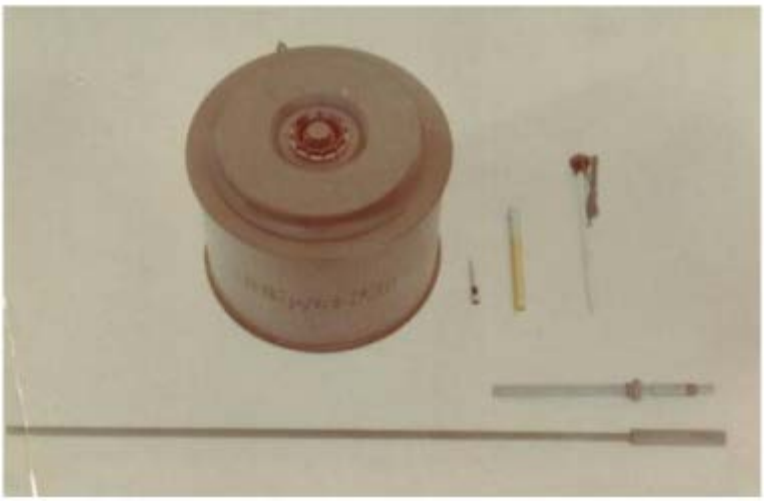 *Mine and fuze*	*1 – tilt rod fuze ; 2 – cork; 3 – pressure disc; 4 – mechanism fuze PZP-MTU; , 5 - the paper, 6 –explosive charge; 7-detonator MD-2, 8 – booster charge.*
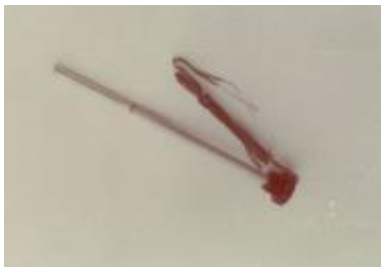 *The electrical fuze ZE-MKU* *fuze MV-5P* *Tilt rod fuze PZP-MTU*	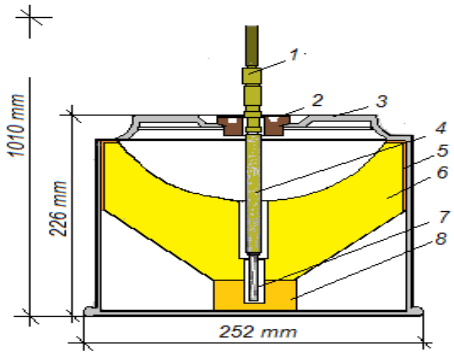

FWP Ammunition

11

AMMUNITION FAMILY HEM

AMMUNITION TYPE	*Land Mine*
DESIGNATION	*Anti-Tank Blast Mine in a Metal Body*
NAME/ASSIGNED MARK (original)	***TM-35 and TM-35M***
COUNTRY of ORIGIN	*Former USSR*

TM-35 and TM-35M

total weight of mine with detonators and transport safety device [*kg*]	*5.2 TM-35, 7.0 TM-35M*
explosive type	*TNT*
weight of explosive [*kg*]	*2.8 TM-35, 4.0 TM-35M*
height of body [*mm*]	*85 TM-35, 115 TM-35M*
length of body [*mm*]	*220*
width of body [*mm*]	*220*
Diamension of pressure plate [*mm*]	*180 x 180*
activation force greater than [*N*]	*1200-1600*
effect of mine	
type of fuze	*MUV with detonator MD-2*
type of additional (anti-lift) fuze	

PACKING

Number of rounds in the package	*4*	**Weight of full package [*kg*]**	*48.4*

DESCRIPTION

Antitank blast mine TM-35 was developed and produced in former USSR before World War II. The mine has a rectangular shape. Small explosive charge (6 small blocks pressed TNT) was not enough effective against tanks, so that was the main reason for modernization. The result of modernization was TM-35M (TM-38) with 4 kg casted TNT. The mine was used in a massive scale during the World War II and subsequent conflicts involving Soviets, during the Korean conflict and in the Middle East. Pressure plate (cover) is connected with fuze actuating lever to the striker retaining pin of fuze MUV with a detonator MD-2. Mine has low effectiveness against armored vehicles, but is used in many countries as mine - fuze for larger loads of explosives.

COLOR and MARKING

Body colour:	*Olive*
Text colour:	*Black. White (Practice)*

FUZE

Type	***Characteristic***
type MUV	*mechanical, contact, pressure fuze*

SAFETY CONSIDERATION THREAT

Mine is very sensitive. Simple removal of mine is very dangerous.

NOTICE

Corrosion may weaken the striker system, making this mine extremely dangerous to handle; it may also make it impossible to remove the fuze from the fuze well.

DRAWINGS/CUTAWAY/MARKING/STENCILING: LEGEND

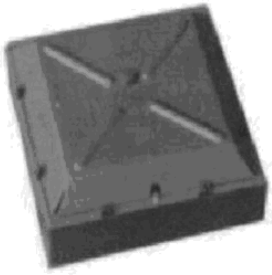

Photo mine TM-35

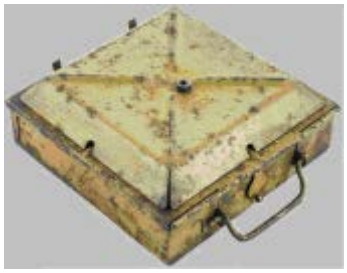

Photo mine TM-35

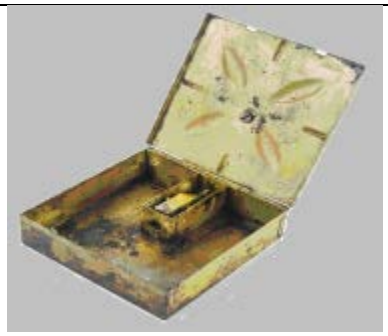

.
Photo mine TM-35 without explosive charge

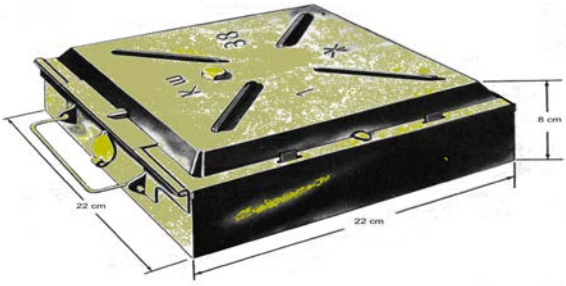

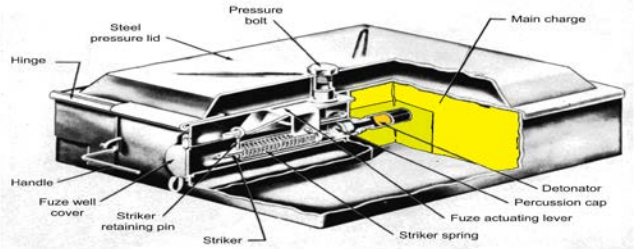

Cross section of mine TM-35

Photo pressure plate mine TM-35

Photo base mine TM-35

FWP Ammunition

12

AMMUNITION FAMILY HEM

AMMUNITION TYPE	*Land Mine*
DESIGNATION	*Anti-Tank Blast Mine in a Metal Body*
NAME/ASSIGNED MARK (original)	***TM-41***
COUNTRY of ORIGIN	*Former USSR*

TM - 41

total weight of mine with detonators and transport safety device [*kg*]	*5.5*
explosive type	*TNT or Ammonite*
weight of explosive [*kg*]	*4.0*
diameter [*mm*]	*255*
height of body [*mm*]	*130*
dimension of pressure plate [*mm*]	*Diameter 265*
activation force greater than [*N*]	*1500-2000*
effect of mine	
type of central fuze	*MV-5 with detonator MD-6*
type of additional (anti-lift) fuze	

PACKING

Number of rounds in the package	*2*	**Weight of full package [*kg*]**	*15.6*

DESCRIPTION

Anti-tank Mine Soviet production TM -41 was intended to destroy the vehicle chassis. Mine was effective just in 1941; later on against heavy armour was not effective due to small explosive charge (4 kg only). The mines were produced by different war manufacturers, that's way small changes in the amount of explosive charge and dimensions (maximum of +/- 200 gr. explosive charge and up to +/- 5 mm diameter of height). A small number of these mines were used during the Balkan conflict. At the end of the 80th this type of mines were withdrawn from service in many countries. Exported by the former Soviet Union to numerous countries.

COLOR and MARKING

Body colour:	*Olive-green*
Text colour:	*Black. White (Practice)*

FUZE

Type	**Characteristic,**
MV-5 with detonator MD-6	*contact, mechanical, pressure*

SAFETY CONSIDERATION THREAT

Mine is very sensitive. Simple removal of mine is dangerous.

NOTICE

Corrosion may weaken the shear pin, making this mine extremely dangerous to handle; it may also make it impossible to remove the fuze from the fuze well.

DRAWINGS/CUTAWAY/MARKING/STENCILING:		LEGEND
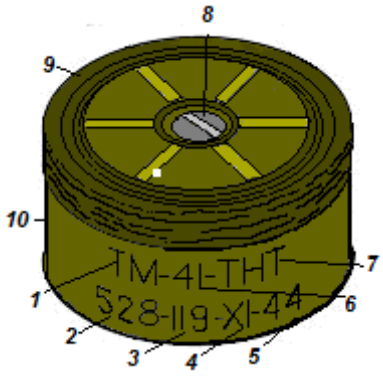	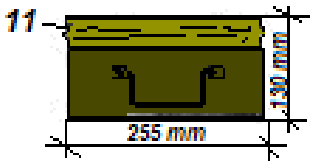	*1 – index of mine; 2 – index of manufacturer; 3 – manufacture lot 4 – month of manufacture 5 – year of manufacture 6 – marking the type of mine; 7 – marking the explosive charge; 8- fuze plug 9 – pressure disc; 10 – body of the mine; 11 – the deformation plate ; 12- base plug, 13- booster charge; 14- base mine; 15- detonator MD-6; 16 – fuze MV-5; 17- explosive charge; 18- base fuze well*
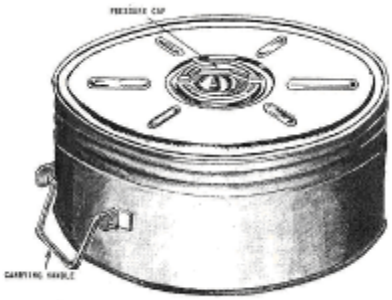		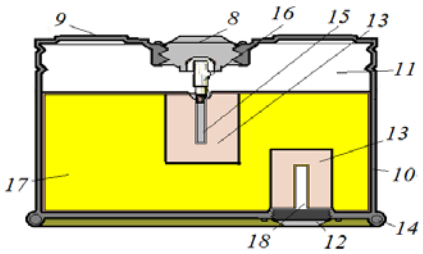 Section of mines TM-41

FWP Ammunition

13

AMMUNITION FAMILY HEM

AMMUNITION TYPE	*Land Mine*
DESIGNATION	*Anti-Tank Mine Blast in a Metal Body*
NAME/ASSIGNED MARK (original)	**TM-46 (TMN-46)**
COUNTRY of ORIGIN	*Former USSR*

TM-46 (TMM-46)	
total weight of mine with detonators and transport safety device [*kg*]	*8.61*
explosive type	*TNT*
weight of explosive [*kg*]	*5.7*
diameter [*mm*]	*304*
height of body [*mm*]	*110 with fuze MVN, 261 with fuze MVSh-46*
dimension of pressure plate [*mm*]	*Diameter 200*
activation force greater than [*N*]	*5 - 1800*
effect of mine	
type of fuze	*MV-5; MVN; MVSh-46; MUV*
type of additional (anti-lift) fuze	

PACKING

Number of rounds in the package	*5*	**Weight of full package [*kg*]**	*56*

DESCRIPTION

Antitank blast mines TM - 46 and TMN-46 were developed and produced in former USSR. Primary was used a fuze MV-5 with detonator MD-2. Mine has a metal body. Mine could be set up as a charge with the use of the tilt rod fuze MSCh-46. Mine TMN-46 is a modified TM-46 mine with difference additional fuze well at the bottom of the mine for another fuze. TM-46 (TMN-46) can be placed manually or mechanically using appropriate devices. Activation pressure of the mine depends on the type of fuze:

- *fuze mechanism MV-5 with detonator MD-2 or mechanism MVM - 1200 -1800 N;*
- *fuze mechanism MVSh - 46 – 210 N - the force required to deflect fuze tilt rod about 3 mm;*
- *fuze mechanism MUV - 5 to 10 N*

This type of the mine was used in the Middle East conflicts, Africa or Europe (Egypt, Israel, South Africa and the former Yugoslavia).

COLOR and MARKING

Body colour:	*Olive*
Text colour:	*Black.*

FUZE

Type	**Characteristic**,
MV-5, MVN	*Mechanical, contact, pressure fuze*
MVSh-46	*Mechanical, contact, pressure fuze tilt rod 46 – 210 N - the force required to move the rod igniter 3 mm;*
MUV	*fuze contact, mechanical, additional tension MUV-force to break the pin - 5 to 10 N.*

SAFETY CONSIDERATION THREAT

Mine is very sensitive. Simple removal of mine is dangerous.

NOTICE

A mine in specific cases may be disarmed.

DRAWINGS/CUTAWAY/MARKING/STENCILING:	LEGEND
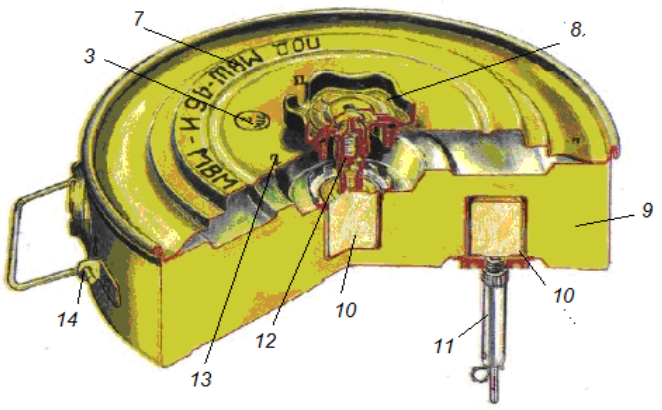 *cross-section of mine TM-46*	*1 - fuze MVSh-46; 2 - marking on the fuze containing the name and number of the manufacturer and the lot and year of fuze manufacture; 3 - technical control mark (KT and No. of controller); 4 – body of mine; 5 - additional fuze well; 6 - marking on the side of mine containing type of mine, lot and year of manufacture, index of manufacturer; 7 - the marking on the pressure disc of mine; 8 - cork; 9 – explosive charge; 10 – booster charge; 11 - additional fuze MUV; 12 - the main fuze MVM; 13 – Number of manufacture lot on the cover mines; 14 - handle.*
 TM-46 mine	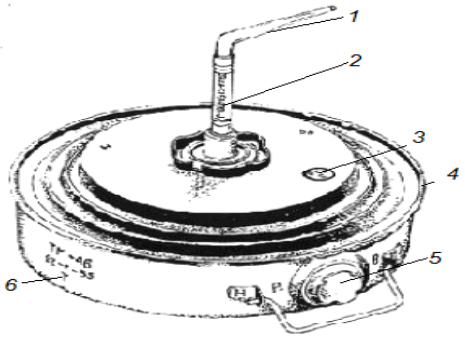 *drawing of mine TM-46*
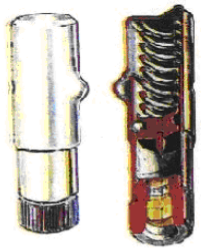 *The mechanism of MV -5*	 *Mechanism of the fuze MVSh-46*
Neutralization by disarming STEP 1 *Reveal mine. Clean the lid.* STEP 2 *Insert the locking pin in traffic.* STEP 3 *Unscrew the cap with igniter. Remove the fuse from the plug.*	

FWP Ammunition

14

AMMUNITION FAMILY HEM

AMMUNITION TYPE	*Land Mine*
DESIGNATION	*Anti-Tank Blast Mine in a Metal Body*
NAME/ASSIGNED MARK (original)	***TM-53***
COUNTRY of ORIGIN	*Former USSR,*

TM - 53

total weight of mine with detonators and transport safety device [*kg*]	*8.5*
explosive type	*TNT*
weight of explosive [*kg*]	*6.32*
diameter [*mm*]	*320*
height of body [*mm*]	*78*
dimension of pressure plate [*mm*]	*Diameter 158*
activation force greater than [*N*]	*1500 - 3000*
effect of mine	
type of fuze	*MV-5 with detonator MD-6*
type of additional (anti-lift) fuze	*pressure type fuze (type MUV; ERG)*

PACKING

Number of rounds in the package	*4*	**Weight of full package [*kg*]**	*43*

DESCRIPTION

TM-53 is a conventional anti-tank blast mine. Production of the former USSR. The design is similar to the mine MPP-61. The mine was taken into service in the 50th of the last century. Mine TM-53 has a cylindrical metal body filled with 6.32 kg of TNT. TM-53 can be placed manually or mechanically using appropriate devices. Mine has a small resistance to blast waves and the pressure of mechanical devices. Mine TM-53 in the 80th of the last century has been withdrawn from the service of many countries of the former Warsaw Pact. Exported to African countries, the Middle East, South and Central America. Marking - the inscription is on the sidewall by black colour: type of the mine, year and number of manufacturer and type of the fuze.

COLOR and MARKING

Body colour:	*Olive*
Text colour:	*Black. White (Practice)*

FUZE

Type	**Characteristic**,
MV-5 with detonator MD-6	*Mechanical, contact, pressure fuze*
type MUV; ERG	*Antilift - mechanical, contact, pressure fuze*

SAFETY CONSIDERATION THREAT

Mine is very sensitive. Simple removal of mine is very dangerous.

NOTICE

Corrosion may weaken the striker system, making this mine extremely dangerous to handle; it may also make it impossible to remove the fuse from the fuze well.

DRAWINGS/CUTAWAY/MARKING/STENCILING:	LEGEND
	1 – pressure disc; 2 - rubber seal, 3 – body of mine, 4 – booster charge; 5 – explosive charge; 6 - handle; 7 – detonator MD-6; 8 - mechanism of fuze MV-5; 9 – cork; 10 – base fuze well;
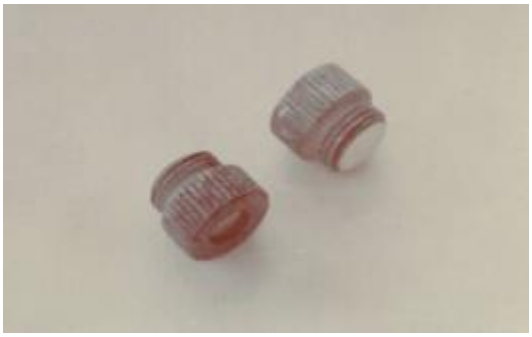 *Detonator MD-6*	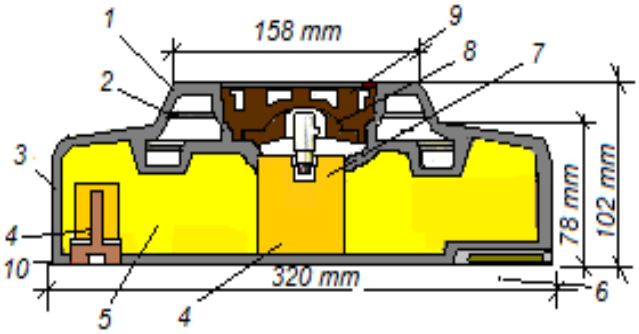
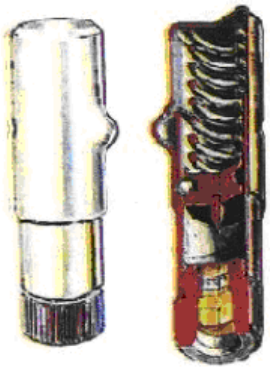 *fuze* MV-5	*fuze* MV-5

FWP Ammunition

15

AMMUNITION FAMILY HEM

AMMUNITION TYPE	*Land Mine*
DESIGNATION	*Anti-Tank Blast Mine in a Metal Body*
NAME/ASSIGNED MARK (original)	**TM-57**
COUNTRY of ORIGIN	*Former USSR*

TM-57

total weight of mine with detonators and transport safety device [*kg*]	*9*
explosive type	*TNT or TGA (TNT /RDX/ Aluminium)*
weight of explosive [*kg*]	*6.5*
diameter [*mm*]	*316*
height of body [*mm*]	*89*
dimension of pressure plate [*mm*]	*Diameter 220*
activation force greater than [*N*]	*1200 - 4000 (fuze MVZ-57); 250 (fuze MVSh-57 with detonator MD-19)*
effect of mine [*mm*]	
type of fuźe	*MVZ-57; MVSh -57 with detonator MD-19*
type of additional (anti-lift) fuze	*type MUV*

PACKING

Number of rounds in the package	*4*	**Weight of full package [*kg*]**	*42.4*

DESCRIPTION

Antitank blast mine TM-57 was developed and produced in former ÚSSR. Mine was taken out of service and replaced by mine TM-62M. Mine TM-57 has a metal body and contains 6.34 kg of TNT or TGA (TNT /RDX/ Aluminium). Mine can be placed manually or mechanically. In the middle of the pressure disc is the fuze well. In the base part of the mine is another fuze well. In the sidewall of the cylindrical body is next well for fuze. Some mines TM-57 are still in Africa, the Middle East and Southeast Asia.

COLOR and MARKING

Body colour:	*Olive*
Text colour:	*Black.*

FUZE

Type	**Characteristic,**
MVZ-57	*Fuze, mechanical, contact, pressure*
MVSh -57(MVSh-46)	*tilt rod, mechanical, contact*
MUV	*Additional fuze - tension MUV-force to break the pin - 5 to 10 N.*

SAFETY CONSIDERATION THREAT

Mine TM-57 can be easily disarmed by screw off the main fuze using a special key. The additional fuzes could be used, which make impossible to remove the mine. The mine can be removed only by using hooks or neutralized by explosive charge.

NOTICE

Corrosion can weaken striker system and prevent unscrew additional fuze with the key. High risk during operation of mines TM-57. Found mine in specific cases can be disarmed.

DRAWINGS/CUTAWAY/MARKING/STENCILING:		LEGEND
 Mine TM-57		*1 – marking - index mine; 2- marking on the side of the mine; 3-index of mine manufacturer 4- index of the lot of manufacture; 5-index of year manufacture; 6- pressure disc; 7- fuze MVZ-57; 8- secondary fuze well; 9- booster charge; 10 –explosive charge; 11- base fuze well.*
 Mine TM-57	 *Tilt rod fuze MVSh-57 (MVSh-46)*	 *Mine TM-57 and the fuze MVSh-57 (MVSh-46)*
		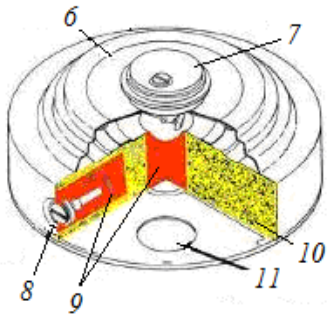

FWP Ammunition

16

AMMUNITION FAMILY HEM

AMMUNITION TYPE	*Land Mine*
DESIGNATION	*Anti-Tank Blast Mine in a Metal Body*
NAME/ASSIGNED MARK (original)	**TM-62 M**
COUNTRY of ORIGIN	*Former USSR*

TM-62M

total weight of mine with detonators and transport safety device [*kg*]	*9.85*
explosive type	*TNT or TNT / RDX or TNT / RDX / Aluminium / Wax*
weight of explosive [*kg*]	*7.0 - TNT (7.5 - TNT/RDX)*
diameter [*mm*]	*320*
height of body [*mm*]	*88*
dimension of pressure plate [*mm*]	
activation force greater than [*N*]	*1750 -3000 (fuze MVCh- 62; MVSh - 62)* *fuze magnetic – in the radius - 1 m*
effect of mine	*the penetration 50 mm RHA*
type of fuze	*MVCh- 62; MVSh - 62; MVN – 62; MVN-72*
type of additional (anti-lift) fuze	

PACKING

Number of rounds in the package	*4*	**Weight of full package [*kg*]**	*45.6*

DESCRIPTION

Antitank blast mine TM 62 M was developed and produced in former USSR. The TM-62 mine family has a four distinguished version: The TM-62 M (metallic body), TM-62 P (plastic body), TM-62 B (without body cover) and TM-62 D (wooden body). The TM-62 M has metal body with a explosive charge - TNT or TNT/RDX or TNT / RDX / Aluminum / Wax. Unlike the TM-62 M predecessors (TMN-46, TM-57,..) there are no secondary fuze wells, however the special anti-disturbance device, like MS-3 can be used.

COLOR and MARKING

Body colour:	*Olive*
Text colour:	*Black. White (Practice)*

FUZE

Type	**Characteristic**,
MVCh- 62 (MVSch – 62)	*mechanical, contact, pressure*
MVN - 62	*Non-contact. magnetic*
MVN-72	*Non-contact, magnetic*

SAFETY CONSIDERATION THREAT

Simple removal of mine is dangerous.

NOTICE

Magnetic type fuze may not work from 20 to 70 days, but average is 21 days, after the battery is discharged.

DRAWINGS/CUTAWAY/MARKING/STENCILING:		LEGEND
Mine TM-62 M with fuze MVCh-62	Mine TM-62 M with fuze MVN-72	*1-index of mine; 2 –index of mine manufacturer; 3 – index of lot of manufacture; 4 – index of year of manufacture; 5 - fuze ; 6 - socket key; 7 - a description of type of fuze, manufacturer, lot and year of manufacture; 8 – safety pin; 9 - rubber plug;10 - fuze MVCh -62; 11 – explosive charge; 12 - handle; 13 – booster charge; 14 - fuze booster ; 15 - detonator M-1.*
Mine TM-62 M with fuze MVCh-62 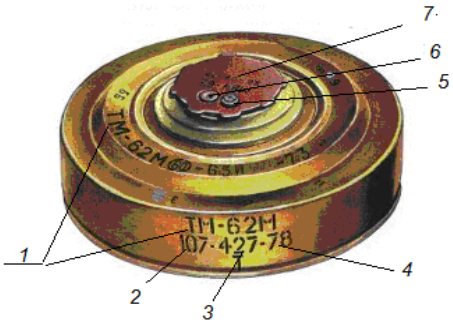		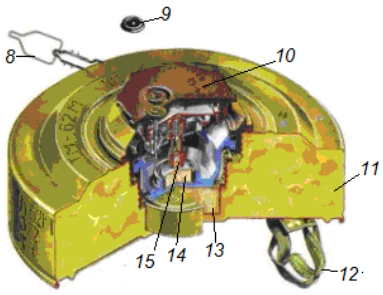
Disarming of mines TM-62M 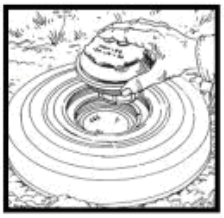 *- Eject the fuse with the key;* *- Protect the safety pin;* *- Unscrew the fuse.* *- Unscrew the bottom of the fuse;* *- Check that the detonator is in the horizontal position (transport).*		Base mine TM-62M

FWP Ammunition

17

AMMUNITION FAMILY HEM

AMMUNITION TYPE	*Land Mine*
DESIGNATION	*Anti-Tank Blast Mine in a Plastic Body*
NAME/ASSIGNED MARK (original)	**MPP-B**
COUNTRY of ORIGIN	*POLAND*

MPP-B

total weight of mine with detonators and transport safety device [*kg*]	*10.5*
explosive type	*TNT*
weight of explosive [*kg*]	*9*
diameter [*mm*]	*320*
height of body [*mm*]	*128*
dimension of pressure plate [*mm*]	
activation force greater than [*N*]	*1500-3000 on pressure fuze , magnetic fuze change of magnetic field at 1.5 m*
effect of mine [*mm*]	
type of fuze	*ZNR, ZNN, ZMN, ZN-97; MVCh- 62; MVSh -62*
type of additional (anti-lift) fuze	

PACKING

Number of rounds in the package	*6*	**Weight of full package [*kg*]**	*72*

DESCRIPTION

Antitank mine MPP-B was developed and produced in Poland. The mine replace the older type of the mine TM-62M. The main difference is that the metal body was replaced by plastic body. The mine MPP-B has new generation of non-contact fuzes such as these - ZNR, ZNN and ZM-97. Fuses ZNR and ZNN are activated by change of the magnetic field generated by the vehicle. Power source is 12 V - lithium battery for 40 days life. Fuze ZN-97 is a removable. Fuzes ZNR and ZMN are not a removable (magnetic). When batteries are discharged (40 days), the fuzes work like the pressure contact fuzes. The size of the fuze wells in the mine MPP-B is the same as in the mine TM-62M. It is also possible to use a series of fuzes MV-62.

COLOR and MARKING

Body colour:	*Olive*
Text colour:	*Black. White (Practice)*

FUZE

Type	**Characteristic**,
ZNR, ZNN, ZMN	*Non-contact, electrical proximity, magnetic*
ZN-97 MVCh- 62;	*Mechanical contact pressure*

SAFETY CONSIDERATION THREAT

Simple removal of mines is very dangerous.

NOTICE

Destroy with explosive. Mine with fuze MVCh-62 and ZN-97 can be neutralized by disarming.

DRAWINGS/CUTAWAY/MARKING/STENCILING:	LEGEND
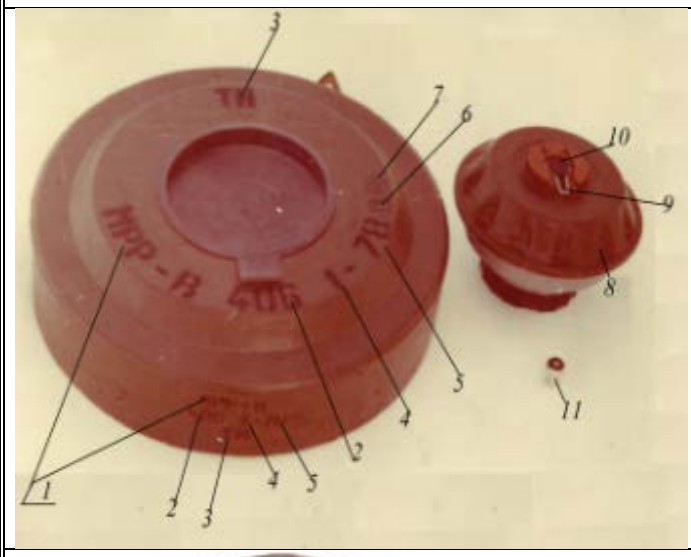	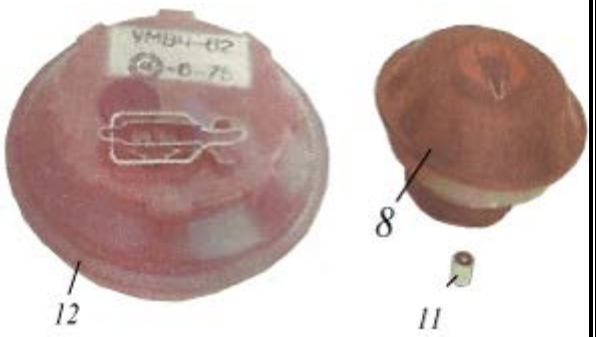
Mine MPP-B - Practice. Marking white	*1- marking of the mine; 2 –marking of the mine manufacturer; 3-index of the explosive charge; 4 –lot of manufacture; 5 – year of manufacture; 6 – technical control mark of explosive charge; 7- technical control mark (KT and No. of controller); 8- fuze ZNN; 9- transport safety pin; 10 - the button fuze; 11- detonator – MD-6; 12- fuze MVCh -62 practice; 13- No. of the fuze; 14- type of fuze-ZNN; 15- marking the month of manufacture; 16 – marking the year of manufacture; 17- marking the lot of manufacture. 18- marking the manufacturer sign.*
Mine MPP-B – Battle	
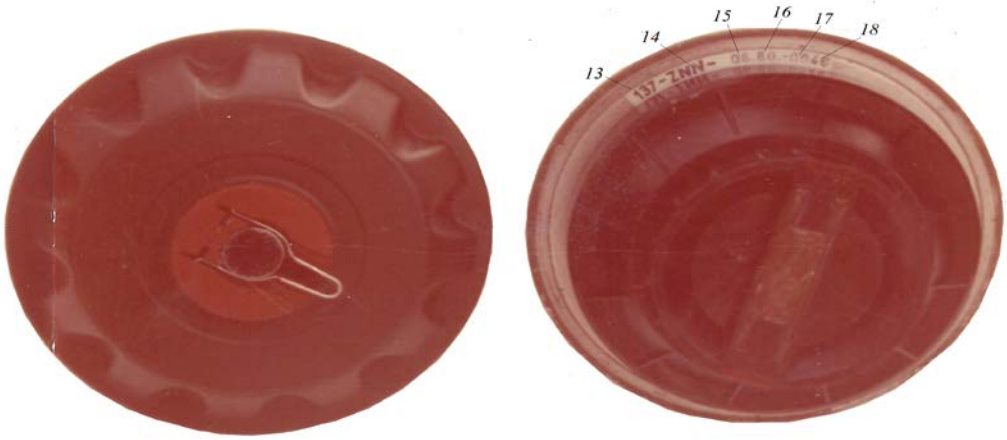	

FWP Ammunition

18

AMMUNITION FAMILY HEM

AMMUNITION TYPE	*Land Mine*
DESIGNATION	*Anti-Tank Blast Mine in a Plastic Body*
NAME/ASSIGNED MARK (original)	***TM-62P***
COUNTRY of ORIGIN	*Former USSR*

TM-62P	
total weight of mine with detonators and transport safety device [*kg*]	*9 - 11*
explosive type	*TNT/TGA/MS*
weight of explosive [*kg*]	*TNT-7.6, TGA -8, MS -8,*
diameter [*mm*]	*340*
height of body [*mm*]	*115*
dimension of pressure plate [*mm*]	*120*
activation force greater than [*N*]	*1750-6500 depends on the type of fuze (magnetic fuze - a radius is about 1 m)*
effect of mine	
type of fuze	*MVCh- 62; MVSh -62; MVN – 62, MVN-72.*
type of additional (anti-lift) fuze	

PACKING

Number of rounds in the package	*4*	**Weight of full package [*kg*]**	*60*

DESCRIPTION

Anti-tank blast mine TM-62 P is based on a former USSR mine TM-62M, with the difference that has a plastic body. Mine can have a pressure-type fuzes (MVCh-62; MVSh -62,…) and magnetic fuzes MVN – 62; MVN-72. The fuze wells of all types TM-62 mines are available for all mechanical pressure type fuzes series MV-62. Operating time for magnetic fuzes is about 21 days until the batteries are discharged. A sensitivity of the magnetic sensors is about 1.0 m. The mine is still in service of the Russian Federation Army, the Belarusian Army and was exported to many countries, e.g. Central and South America, the Middle East and Africa, Asia or Europe.

COLOR and MARKING

Body colour:	*brown*
Text colour:	*black.*

FUZE

Type	**Characteristic,**
MVCh- 62 (MVSch – 62)	*contact,mechanical, pressure*
MVN- 62, MVN-72	*Non contac, electric, magnetic*

SAFETY CONSIDERATION THREAT

Mine is very sensitive. Simple removal of mine is very dangerous.

NOTICE

Corrosion may weaken the striker system, making this mine extremely dangerous to handle; it may also make it impossible to remove the fuze from the fuze well.

DRAWINGS/CUTAWAY/MARKING/STENCILING: LEGEND

Mine TM-62 P-Practice

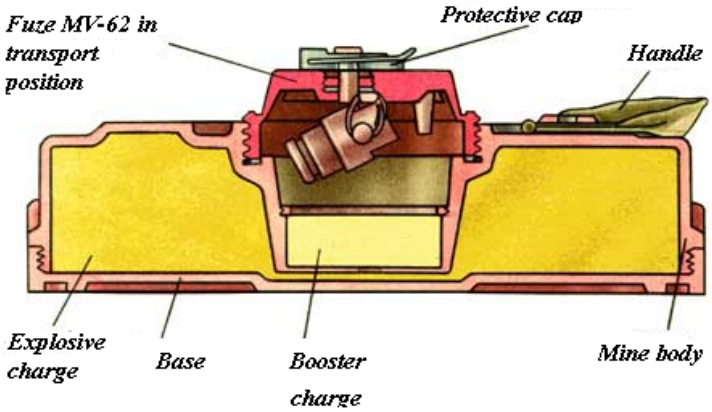

Mine TM-62P with fuze MV-62

FWP Ammunition

19

AMMUNITION FAMILY HEM

AMMUNITION TYPE	*Land Mine*
DESIGNATION	*Anti-Tank Blast Mine in a Plastic Body*
NAME/ASSIGNED MARK (original)	***TM-62P2***
COUNTRY of ORIGIN	*Former USSR*

TM-62P2

total weight of mine with detonators and transport safety device [*kg*]	*10 with the fuze MVP-62*
explosive type	*TNT,TGA, MS*
weight of explosive [*kg*]	*6.5 –TNT, 7.0 – TGA, MS*
diameter [*mm*]	*322*
height of body [*mm*]	*128 with fuze MVP-62, 330 – 1000 with fuze MVSh-62*
dimension of pressure plate [*mm*]	*125*
activation force greater than [*N*]	*1200-7500 depends on type of fuze (magnetic fuze - a radius of about 1 m)*
effect of mine	
type of l fuze	*MVCh- 62; MVSh -62; MVN – 62 and other fuzes series MV-62.*
type of additional (anti-lift) fuze	

PACKING

Number of rounds in the package	*4*	**Weight of full package [*kg*]**	*60*

DESCRIPTION

Antitank mine TM-62 P2 is a version of mine TM-62P developed and produced in former USSR. The difference is in using of other types of explosives and other possible application of different types of fuzes Mine can be placed manually or by special mechanical devices. The mine is smaller and lighter than mine TM-62P. Mine is initiated by pressure or by magnetic impulse. Operation time of the magnetic fuzes MVN - 62; MVN 72 is about 21 days until the battery is discharged. Sensitivity on the magnetic field is about 1.0 m. The mine is still in service of the Russian Federation Army, Belarus Army and was exported to Central and South America, Africa and the Middle East, Asia or Europe.

COLOR and MARKING

Body colour:	*brown*
Text colour:	*black.*

FUZE

Type	**Characteristic**,
MVCh- 62 (MVSh – 62)	*contact, presure, tilt rod fuze*
MVN – 62, MVN-72	*non contact, electrical, magnetic*

SAFETY CONSIDERATION THREAT

Mine is very sensitive. Simple removal of mine is very dangerous.

NOTICE

Corrosion may weaken the striker system, making this mine extremely dangerous to handle; it may also make it impossible to remove the fuze from the fuze cavity

DRAWINGS/CUTAWAY/MARKING/STENCILING: LEGEND

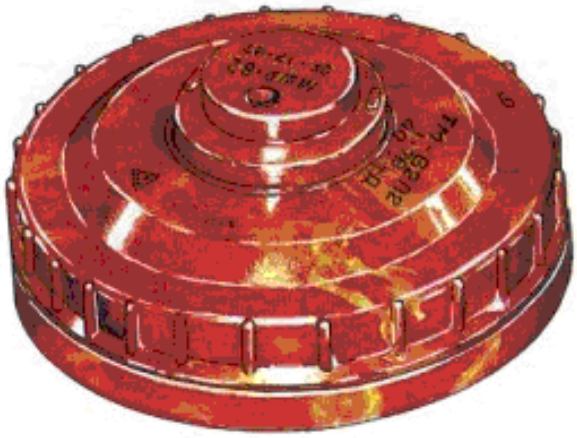

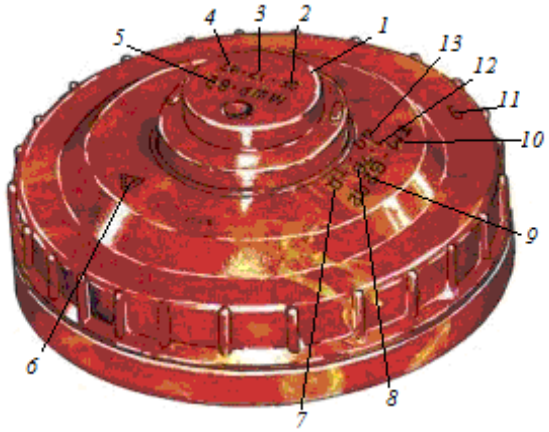

1 - fuze; 2 - marking of the fuze - number, 3 – marking the manufacture lot, 4 –marking the year of fuze manufacture, 5 - Description of the fuze - the nature and type; 6 - control character body faces; 7 - marking the type of explosive; 7 - variety of explosive (a mixture of RDX / TNT 40); 8 - year of manufacture; 9 - variety of mine, 10 - the type of mine; 11 – No of manufacturer; 12 – manufacture lot; 13 - the amount of RDX in charge.

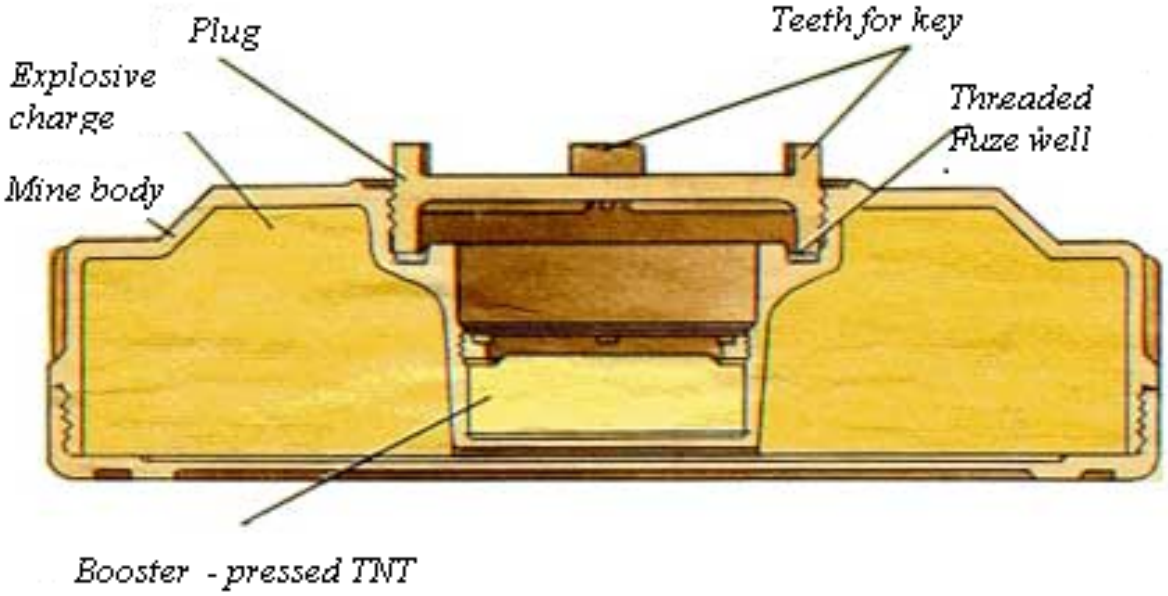

Mine TM-62P2 without fuze

FWP Ammunition

20

AMMUNITION FAMILY HEM

AMMUNITION TYPE	*Land Mine*
DESIGNATION	*Anti-Tank Blast Mine in a Plastic Body*
NAME/ASSIGNED MARK (original)	**TM-62 P3**
COUNTRY of ORIGIN	*Former USSR*

TM-62 P3

total weight of mine with detonators and transport safety device [*kg*]	*8.2*
explosive type	*TNT , TGA-16, MS*
weight of explosive [*kg*]	*6.5 with TNT, 7.2 with TGA-16, MS*
diameter [*mm*]	*320*
height of body [*mm*]	*128 with MVP-62, 330 or 1000 with MVSh*
dimension of pressure plate [*mm*]	*Diameter 125*
activation force greater than [*N*]	*1200-7500 fuze MVP-62.1500-2000 fuze MVCh- 62 (MVSh – 62), magnetic MVN – 62; MVN - 72 in the radius - 1 m*
effect of mine	
type of fuze	*MVCh- 62; MVSh - 62; MVN – 62; MVN-72*
type of additional (anti-lift) fuze	

PACKING

Number of rounds in the package	*4*	**Weight of full package [*kg*]**	*53*

DESCRIPTION

Antitank blast mine TM-62 P3 is a mine of TM-62 series. The mine was developed and produced in former USSR. The body is made from hard plastic (PE). The mine can has a magnetic fuze MVN – 72. The period of activation is from 20 to 70 days until the battery is discharged. The magnetic sensor detects the magnetic field within a radius about 1.0 m. The mine is still in the service of the Russian Federation Army, Belarus Army and was exported to many countries, Central and South America, the Middle East, Asia or Europe.

COLOR and MARKING

Body colour:	*Olive*
Text colour:	*Black. White (Practice)*

FUZE

Type	**Characteristic**,
MVCh- 62 (MVSh – 62)	*mechanical, contact, pressure fuzes*
MVN-72; MVN – 62	*non-contact, magnetic fuzes*

SAFETY CONSIDERATION THREAT

Mine TM-62P3 has easily disarmed the main fuze with a special key. The danger is the use of additional fuzes. Download using hooks or neutralize with explosive charge.

NOTICE

Magnetic type fuzes work till 20 to 70 days until the battery is discharged.

DRAWINGS/CUTAWAY/MARKING/STENCILING:	LEGEND
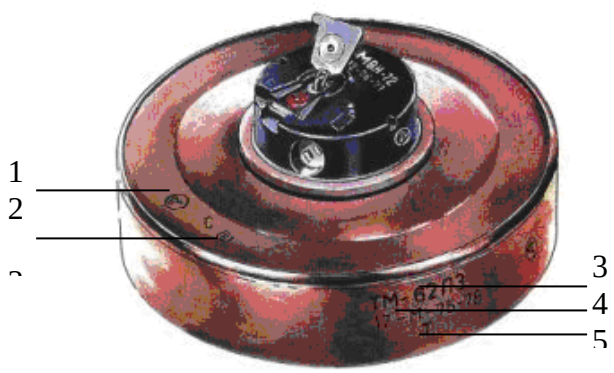 *Mine TM-62 P3 with fuze MVN-72*	*1 – marking the technical control mark body of mine (KT and No. of controller); 2 – Marking the technical control mark mine (KT and No. of controller); 3 – marking the index of mine; 4 - index of mine manufacturer - lot of manufacture – year of manufacture; 5 – marking the index of explosive charge;*
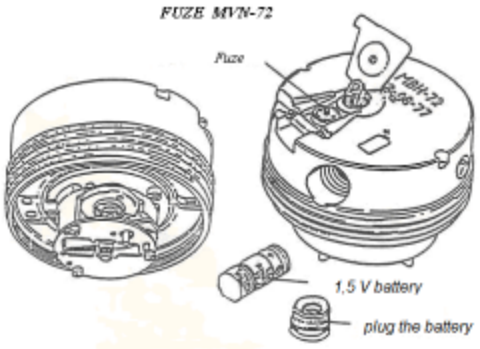	 fuze MVN-72
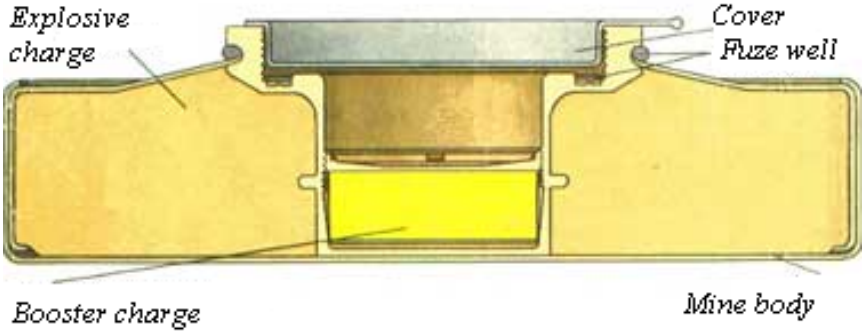 *Mine TM-62 P3 without fuze*	

FWP Ammunition

21

AMMUNITION FAMILY HEM

AMMUNITION TYPE	*Land Mine*
DESIGNATION	*Anti-Tank Blast Mine in a Paper Body*
NAME/ASSIGNED MARK (original)	***TM-62B***
COUNTRY of ORIGIN	*Former USSR*

TM-62B	
total weight of mine with detonators and transport safety device [*kg*]	*8.6*
explosive type	*VV-32*
weight of explosive [*kg*]	*8.2*
diameter [*mm*]	*320*
height of body [*mm*]	*125 with fuze MV-62*
dimension of pressure plate [*mm*]	*Diameter 120*
activation force greater than [*N*]	*1700-6500 (magnetic fuze - a radius of about 1 m)*
effect of mine	
type of central fuze	*MV-62, MVCh- 62; MVSh -62; MVN – 62; MVP-62; MVN-72*
type of additional (anti-lift) fuze	

PACKING

Number of rounds in the package	*4*	**Weight of full package [*kg*]**	*65*

DESCRIPTION

Anti-tank mine TM - 62B is a block of explosive material covered by cardboard or paper. The mine was developed and produced in former USSR. The mine is placed manually. Mine can be used with fuzes type MV-62, e.g. MVCh-62; MVZ-62; MVN-72, MVP-62 and the other fuzes used with mine TM-62. TM-62B has no body and is made of a highly stable explosive VV - 32 (mixture Amonal with TNT). In the upper surface are two holes for attachment to a transport belt (not in each series).

COLOR and MARKING

Body colour:	*The mine is not painted, and has a yellow-grey colour with dark-brown spots, with markings pressed into its side.*
Text colour:	*black.*

FUZE

Type	**Characteristic**,
MVCh- 62 (MVSh – 62)	*mechanical, contact, pressure*
MVZ – 62 (MVP-62)	*mechanical, contact, pressure*
MVN-72 (MVN-62)	*non contact,electrical, magnetic*

SAFETY CONSIDERATION THREAT

Mine is very sensitive. Simple removal of mine is very dangerous.

NOTICE

Corrosion may weaken the shear pin, making this mine extremely dangerous to handle; it may also make it impossible to remove the fuze from the fuze well.

DRAWINGS/CUTAWAY/MARKING/STENCILING: LEGEND

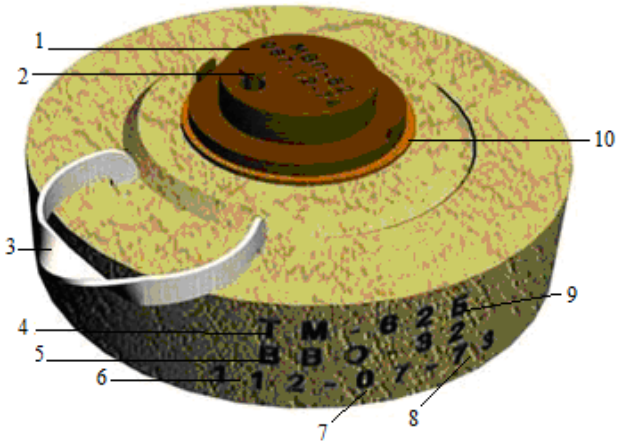

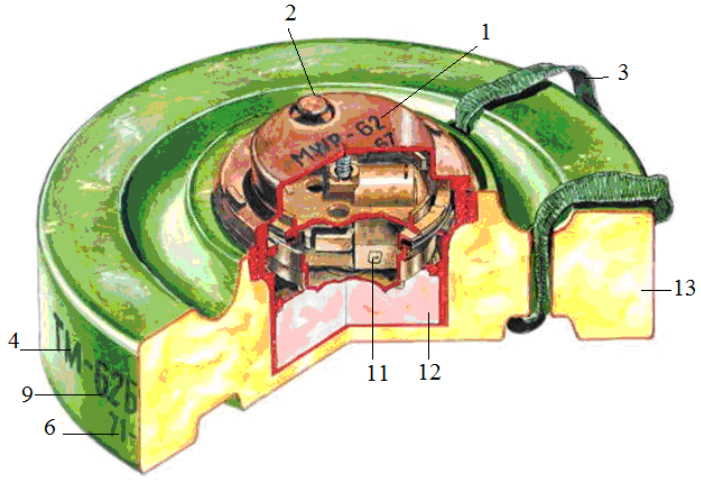

1 - fuze MVP-62, 2 – arming button 3 - carrying strap; 4 – marking –type of mine, 5 - marking - the type of explosive, 6 – marking the index of the manufacturer; 7 – marking the month of manufacture; 8 – marking –the year of manufacture; 9 - marking - the type of mine, 10 - plastic socket for the fuze; 11 - detonator; 12 - booster charge; 13 – explosive charge

FWP Ammunition

22

AMMUNITION FAMILY HEM

AMMUNITION TYPE	*Land Mine*
DESIGNATION	*Anti-Tank Blast Mine in a **Plastic Body***
NAME/ASSIGNED MARK (original)	***TM-62B-plastic***
COUNTRY of ORIGIN	*Former USSR*

TM-62B	
total weight of mine with detonators and transport safety device [*kg*]	*10*
explosive type	*TNT*
weight of explosive [*kg*]	*9*
diameter [*mm*]	*315*
height of body [*mm*]	*102*
dimension of pressure plate [*mm*]	
activation force greater than [*N*]	*1500-2000 (magnetic fuze - a radius of about 1 m)*
effect of mine	
type of central fuze	*MVCh- 62; MVSh -62; MVN – 62; MVP-62; MVN-72*
type of additional (anti-lift) fuze	

PACKING

Number of rounds in the package	*4*	**Weight of full package [*kg*]**	*65*

DESCRIPTION

Antitank mine TM-62 B was developed and produced in former USSR. The mine is a version of anti-tank mine TM 62. Added letter B means that mine is without metal, it is difficult detectable by ferromagnetic devices. The body of mine is from fiberglass resin (about 1 mm thick.). Construction and principles of operation are similar like anti-tank mine TM-62B - paper. The mine can be used with the fuzes series MV-62, e.g. MVCh-62; MVN-62; MVN-72, MVP-62 and the other used to mines TM-62.

COLOR and MARKING

Body colour:	*Brown - the colour of the plastic, green*
Text colour:	*black.*

FUZE

Type	**Characteristic**,
MVCh- 62 (MVSh – 62), MVP – 62	*contact, mechanical, pressure*
MVN-72, MVN – 62	*proximity, electrical, magnetic*

SAFETY CONSIDERATION THREAT

Mine is very sensitive. Simple removal of mine is very dangerous.

NOTICE

Corrosion may weaken the striker system, making this mine extremely dangerous to handle; it may also make it impossible to remove the fuze from the fuze well.

DRAWINGS/CUTAWAY/MARKING/STENCILING:	LEGEND
Mine TM-62B with fuze MVP-62 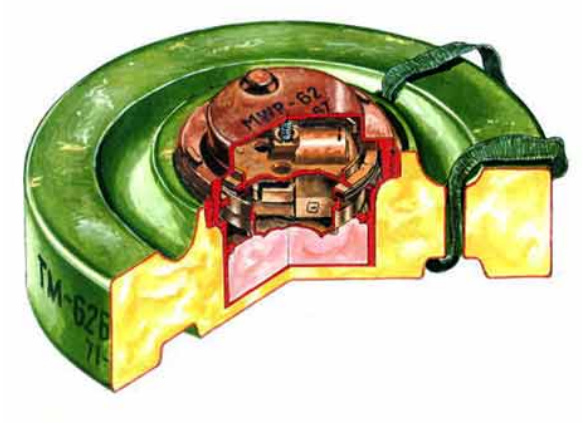 	 *fuze MVCh-62,*
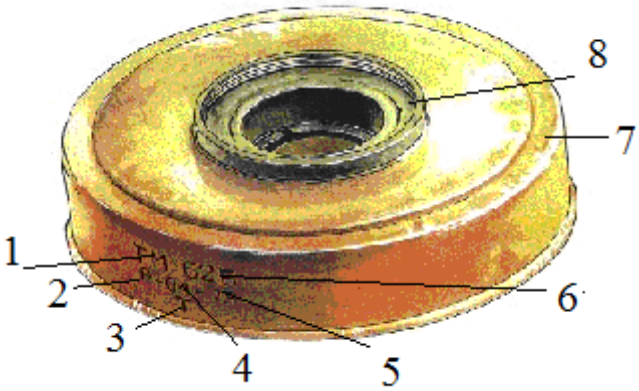 *Mine TM-62B*	*1 - marking - the type of mine, 2 – marking the index of manufacturer; 3 – marking the type of explosive, 4 – marking the lot (month) of manufacture; 5 – marking the year of manufacture, 6 - variety mines; 7 - plastic body 8 – fuze well;*

FWP Ammunition

23

AMMUNITION FAMILY HEM

AMMUNITION TYPE	*Land Mine*
DESIGNATION	*Anti-Tank Blast Mine in a Body from Capronic Textile*
NAME/ASSIGNED MARK (original)	***TM-62T***
COUNTRY of ORIGIN	*Former USSR*

TM-62T

total weight of mine with detonators and transport safety device [*kg*]	*9.2*
explosive type	*TNT/TGA*
weight of explosive [*kg*]	*7.4 –TNT/ 7.9- TGA5,*
diameter [*mm*]	*318*
height of body [*mm*]	*112 with the fuze MVP-62, 330 to 1000 with the fuze MVSch-62*
dimension of pressure plate [*mm*]	*Diameter 125*
activation force greater than [*N*]	*1200 -7500 (magnetic fuze- a radius of about 1 m)*
effect of mine	
type of central fuze	*MVCh- 62; MVSh -62; MVN – 62; MVP-62; MVN-72*
type of additional (anti-lift) fuze	

PACKING

Number of rounds in the package	*4*	**Weight of full package [*kg*]**	*55*

DESCRIPTION

Anti-tank blast mine TM - 62T was developed and produced in former USSR. Mine has a body of impregnated capronic textile with explosives (TNT or TGA). Mine can be placed manually or mechanically using appropriate devices. Mine can be used with fuzes type MV-62, e.g. MVCh-62; MVN-62; MVN-72, MVP-62 and the others fuzes used for mine TM-62. TM-62T in compare with the others mines of TM-62 series, has no fixed body and consists of a stable explosive TGA or TNT. Booster of pressed TNT is placed below the fuze well. Additional fuze well (series MUV) is located on the side of the mine. Mine is barely detectable by ferromagnetic devices.

COLOR and MARKING

Body colour:	*Olive*
Text colour:	*black.*

FUZE

Type	**Characteristic,**
MVCh- 62 (MVSh – 62);	*contact, mechaical, pressure*
MVN – 62 , MVN - 72	*Non contact, proximity, electrical, magnetic*

SAFETY CONSIDERATION THREAT

Mine is very sensitive. Simple removal of mine is very dangerous.

NOTICE

Corrosion may weaken the shear pin, making this mine extremely dangerous to handle; it may also make it impossible to remove the fuse from the fuze well.

DRAWINGS/CUTAWAY/MARKING/STENCILING:	LEGEND
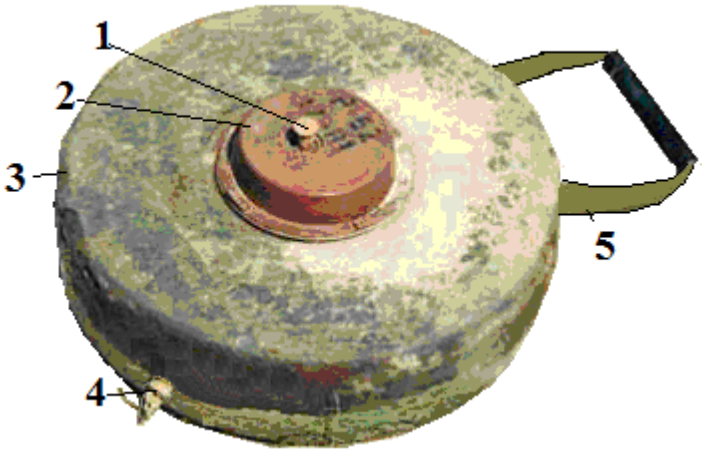	*1 – arming button, 2 – fuze 3 - body from capronic textile ; 4 – additional fuze, 5 - carrying handle.*
	 Legend *1 – Explosive charge, 2 – textile body, 3 – cover, 5 – booster charge, 7 – threaded fuze well.*
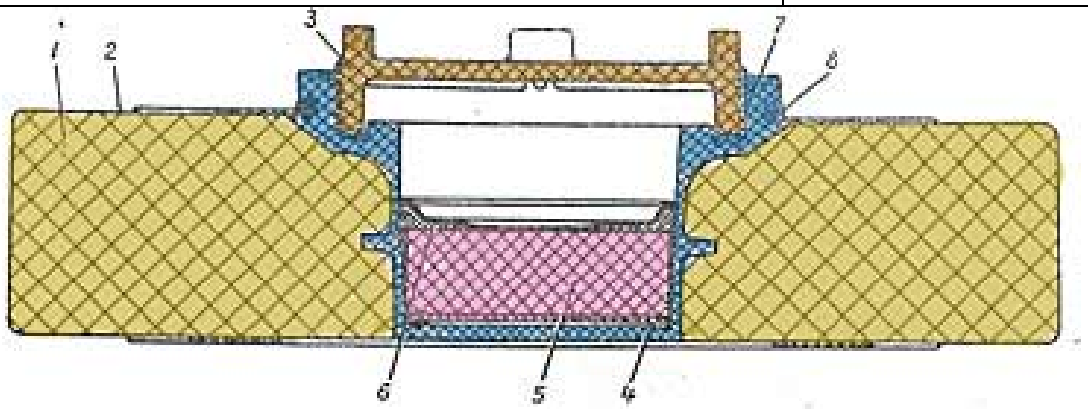 *Antitank mine TM-62T without fuze*	

FWP Ammunition

24

AMMUNITION FAMILY HEM

AMMUNITION TYPE	*Land Mine*
DESIGNATION	*Anti-Tank Blast Mine in a Wooden Body*
NAME/ASSIGNED MARK (original)	***TM-62D***
COUNTRY of ORIGIN	*Former USSR*

TM-62D	
total weight of mine with detonators and transport safety device [*kg*]	*11.3 -13*
explosive type	*TNT/TGA/MS/A-80*
weight of explosive [*kg*]	*5.8 -11.1 depends on type of explosive*
height of body [*mm*]	*178 with the fuze MV-62*
length of body [*mm*]	*340*
width of body [*mm*]	*280*
dimension of pressure plate [*mm*]	*Diameter 120*
activation force greater than [*N*]	*1750-6500 (magnetic detonator - a radius of about 1 m)*
effect of mine	
type of fuze	*MV-62, MVK-62, MVCh- 62; MVSh -62; MVN – 62; MVP-62; MVN-72*
type of additional (anti-lift) fuze	

PACKING

Number of rounds in the package	*4*	**Weight of full package [*kg*]**	*60-80*

DESCRIPTION

Anti-tank mine TM-62 D was developed and produced in former USSR. Mine body is rectangular wooden box. Mine is designed for factory production as well as field production using military saw-mill sets. Mine can be loaded with different types and amounts of explosive. Mine has recommended fuzes MV-62, MVP-62 and MVK-62 These fuzes have only a small amount of metallic parts. The use of other fuzes type 62 is possible too.

COLOR and MARKING

Body colour:	*The mine is not painted, and has a yellow-grey color with dark-brown spots, with markings pressed into its side.*
Text colour:	*black.*

FUZE

Type	**Characteristic**,
MVCh- 62 (MVSh – 62,MVP-62,)	*contact, mechanical, pressure*
MVN – 62,MVN-72	*non contact, electrical,, magnetic*

SAFETY CONSIDERATION THREAT

Mine is very sensitive. Simple removal of mines is dangerous.

NOTICE

Long lying mine in land may weaken corps of mines (decomposition) and corrosion of metal detonator, to increases risk during the disarm min with fuzes version TM-62.

DRAWINGS/CUTAWAY/MARKING/STENCILING: LEGEND

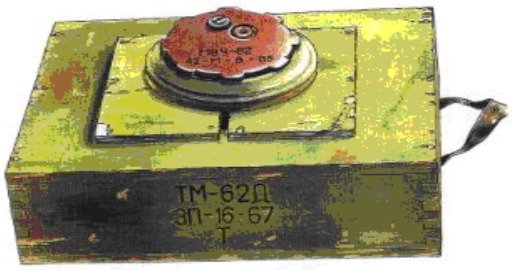

fuze MVCh-62,

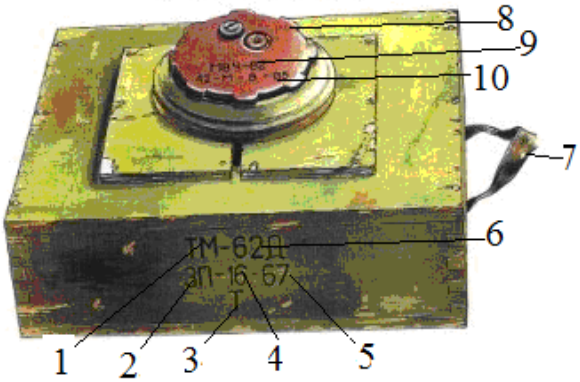

1 - marking of mine, 2 - marking of manufacturer; 3 – marking the type of explosive, 4 – marking the lot, 5 - marking the year of manufacture;
6 - type of mine - D-wood, 7 - carrying handle; 8 - fuze MVCh-62,
9 - marking of the fuze- variety, 10 - marking manufacturer, lot and year of fuze manufacture

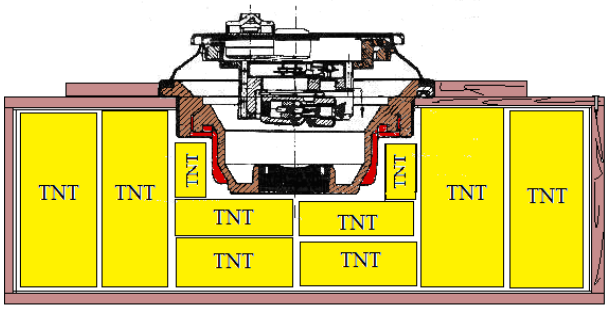

cross section mine TM-62D

FWP Ammunition

25

AMMUNITION FAMILY HEM

AMMUNITION TYPE	*Land Mine*
DESIGNATION	*Anti-Tank Shaped Charge Mine in a Metal Body*
NAME/ASSIGNED MARK (original)	***TMK-2***
COUNTRY of ORIGIN	*Former USSR*

TMK-2

total weight of mine with detonators and transport safety device [*kg*]	*12.5*
explosive type	*TNT or TG-50*
weight of explosive [*kg*]	*6 –TNT / 6.5 TG-50*
diameter [*mm*]	*307*
height of body [*mm*]	*265*
activation force greater than [*N*]	*80 - 120*
effect of mine	*the penetration of the RHA plate - 60 mm with TNT / 110 with TG-50*
type of fuze	*MVK-2 with detonators MD-7M and DUM-2*
type of additional (anti-lift) fuze	

PACKING

Number of rounds in the package	*2*	**Weight of full package [*kg*]**	*40*

DESCRIPTION

Antitank shaped charge mine TMK-2 with the tilt rod fuze has former USSR origin. Mine was developed in 1955. The aim is to destroy armoured vehicle chassis. Explosive charge is a mixture of TNT with RDX, marked like TG-50 or casted TNT. Secondary detonator DUM-2 is in the central part of the mine. Tilt rod fuze MVK-2 is mounted on the side of mine with the detonator MD-7M. Bending of the tilt rod fuze approximately 24° - 36° by force of 80-129 N, releases the striker of the fuze MVK-2 and initiate the detonator MD-7M and then DUM- 2. Mine can be placed manually only. Used in the former Soviet Union, Bulgaria, Angola, Ethiopia, Mozambique and Namibia.

COLOR and MARKING

Body colour:	*Olive*
Text colour:	*Black.*

FUZE

Type	**Characteristic,**
MVK-2	*Mechanical, contact tilt rod , pressure*

SAFETY CONSIDERATION THREAT

Mine is very sensitive. Simple removal of mine is dangerous.

NOTICE

Corrosion may weaken the shear pin, making this mine extremely dangerous to handle; it may also make it impossible to remove the fuze from the fuze cavity.

DRAWINGS/CUTAWAY/MARKING/STENCILING

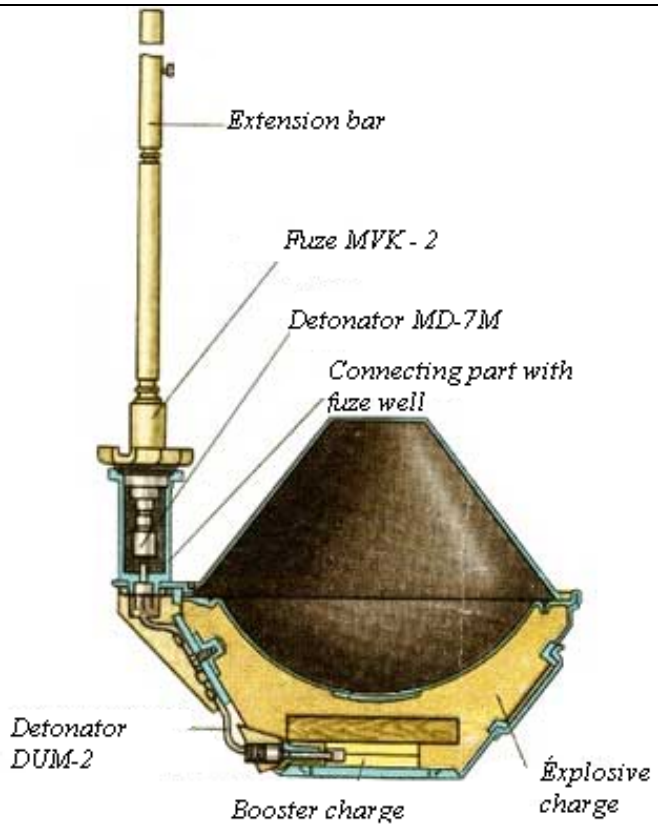

Antitank mine TMK-2

FWP Ammunition

26

AMMUNITION FAMILY HEM

AMMUNITION TYPE	*Land Mine*
DESIGNATION	*Anti-Tank Shaped Charge Directional Mine in a Metal Body*
NAME/ASSIGNED MARK (original)	***TM-83***
COUNTRY of ORIGIN	*Former USSR*

TM-83	
total weight of mine with detonators and transport safety device [*kg*]	*28.1*
explosive type	*TG-40/60 (60% RDX 40% TNT)*
weight of explosive [*kg*]	*9.6*
diameter [*mm*]	*250*
height of body [*mm*]	*440*
dimension of pressure plate [*mm*]	
activation force greater than [*N*]	
effect of mine]	*From a distance of 50 m penetrate ŘHA plate with a thickness of 100 mm, clearance hole with a diameter of 80-120 mm*
type of fuze	*MD-6M with seismic and the infrared sensors. The detection range for the 150-200 m area with an angle 35°. MVN-72 with magnetic sensor*
type of additional (anti-lift) fuze	

PACKING

Number of rounds in the package	*1*	**Weight of full package [*kg*]**	*28.5*

DESCRIPTION

Antitank shaped charge directional mine TM - 83 was developed and produced in former USSR. Mine is designed like side-attack mine. The mine is essentially a plate charge mounted in a stand. The mine uses seismic sensor to identify approaching targets and IR sensor. When a valid target passes into the field of sensors view, the warhead is initiated. The plate (copper shaped charge liner) is formed onto a slug, which is propelled by the explosive charge to the high velocity sufficient to destroy the target. Sensitivity of seismic sensor is up to 250 m (for tanks), sensitivity of infrared sensor is up to 120 m. Mine can be also fired remotely by wire from a distance 100 m. Retains combat readiness to act within 30 days. Mine can operate in temperatures range from -30 ° C to +50 ° C. Used during conflict between USSR and Afghanistan.

COLOR and MARKING

Body colour:	*Olive*
Text colour:	*Black*

FUZE

Type	**Characteristic**
MD-6M	*Non contact, electrical, proximity, seismic and infrared sensors*
MVN-72	*Non contact, electrical, proximity, magnetic*

SAFETY CONSIDERATION THREAT

Mine is very sensitive. Simple removal of mine is very dangerous

NOTICE

Removal of mine can be difficult because of infrared and seismic sensors may be adjusted for detection of changes and vibrations produced by human (action and results is similar as the mine MON-200).

DRAWINGS/CUTAWAY/MARKING/STENCILING:		LEGEND
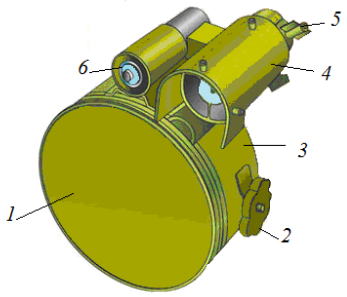 *Mine **TM -83***	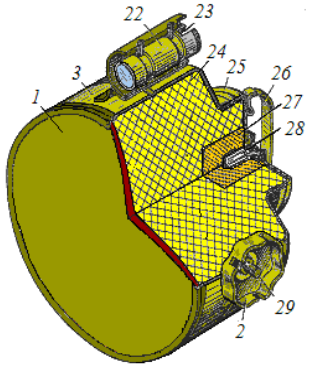 *Mine TM-83 cross-section*	*1 - the shaped charge liner; 2 - fixing screw; 3-body of mine; 4- infrared sensor (night vision); 5 - regulation of infrared sensor (sensor axis); 6 - an optical sensor; 22 - the optical sensor (the infrared) **ОАО «НИИИ»;** 24 - eyepiece of an optical sensor; 25- base of mine; 26- handle; 27- booster charge; 28 – well for the fuze MD-6M; 29 - pin holder;*
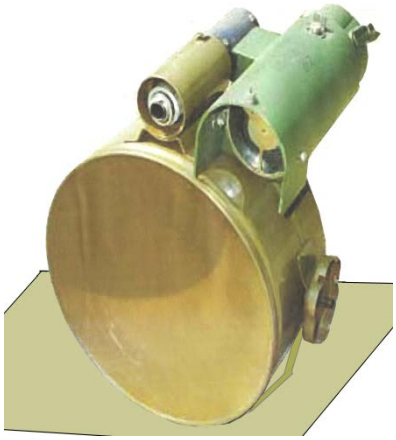	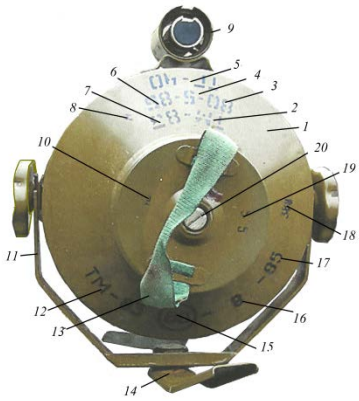 *Mina TM -83 the position fighting With an optical sensor and an infrared- ОАО «НИИИ»*	*1- body of mine; 2- marking the type of mine; 3- marking the mine manufacturer; 4- marking the lot of manufacture; 5- marking the explosive charge; 6- marking the year of manufacture; 7 – marking the type of mine 8- sign control body mines; 9- an optical sensor, an infrared ОАО «НИИИ»; 10- sign control shaped charge liner; 11- mounting bracket mine - bracket; 12- marking the type of mine; 13- handle; 14- pivot; 15- marking the explosive charge manufacturer; 16- marking the lot of explosive charge manufacture; 17- marking the year of explosive charge manufacture; 18- Marking the mine; 19- sign control mine; 20 – well for the detonator;*
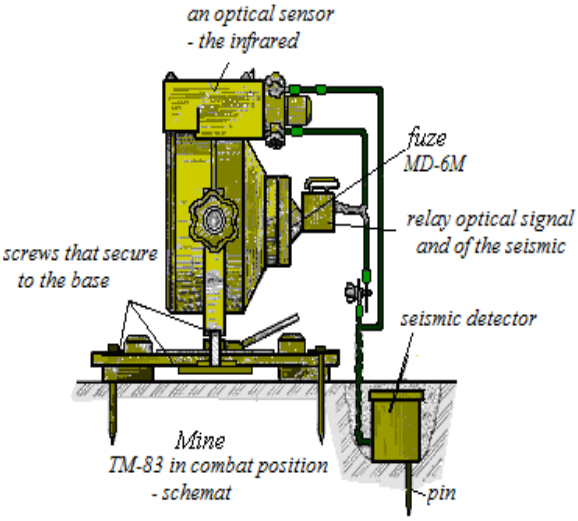		

FWP Ammunition

27

AMMUNITION FAMILY HEM

AMMUNITION TYPE	*Land Mine*
DESIGNATION	*Anti-Tank Shaped Charge Mine in a Metal Body*
NAME/ASSIGNED MARK (original)	**TM-89**
COUNTRY of ORIGIN	*Russian Federation*

TM-89

total weight of mine with detonators and transport safety device [*kg*]	*11.5*
explosive type	*TG-40 (compound 60% RDX 40% TNT)*
weight of explosive [*kg*]	*6.7*
diameter [*mm*]	*320*
height of body [*mm*]	*129*
dimension of pressure plate [*mm*]	
activation force greater than [*N*]	*1750 -3000 (fuze MVCh- 62; MVSh - 62)*
effect of mine	*penetration RHA plate up to 100 mm thickness*
type of central fuze	*VPTM-89; MVCh- 62; MVSh - 62; MVN – 62, MVN-89*
type of additional (anti-lift) fuze	

PACKING

Number of rounds in the package	*4*	**Weight of full package [*kg*]**	*63.5*

DESCRIPTION

Antitank shaped charge mine TM 89 with fuze MVN-89 was developed in Russian Federation base on the TM-62 mine. Mine has metal body. Mine was taken into service by Russian Army at the beginning of 1993. Mine can be placed manually or mechanically by special devices. The primary fuze is MVN-89. The fuze uses seismic and magnetic sensors. Seismic sensor is used like wake-up signal to turn on magnetic sensor. The magnetic sensor is very sensitive, it is danger to be in neighbourhood with metallic tools (knife, metal detector…). Mine can be armed with a two channels fuze VPTM -89 (seismic and magnetic) or fuzes from series MV -62. Fuze VPTM -89 can act by change of the magnetic field or seismic activity in the period of time from 20 to 70 days.

COLOR and MARKING

Body colour:	*Olive*
Text colour:	*Black. White (Practice)*

FUZE

Type	**Characteristic**,
VPTM-89	*Dual fuze –proximity, seismic and magnetic*
MVCh- 62/MVSh – 62	*mechanival.contact, pressure*
MVN-89, MVN-62	*proximity, magnetic*

SAFETY CONSIDERATION THREAT

Mine is very sensitive. Simple removal of mine is dangerous.

NOTICE

Due to seismic and magnetic sensors is impossible to remove mines by disarmament. Destroyed by explosive charges or trawls. Technical data protected by the manufacturer.

DRAWINGS/CUTAWAY/MARKING/STENCILING:	LEGEND
Mine TM-89 with fuze VPTM -89 can be set manually or by using the setter GMZ - 3 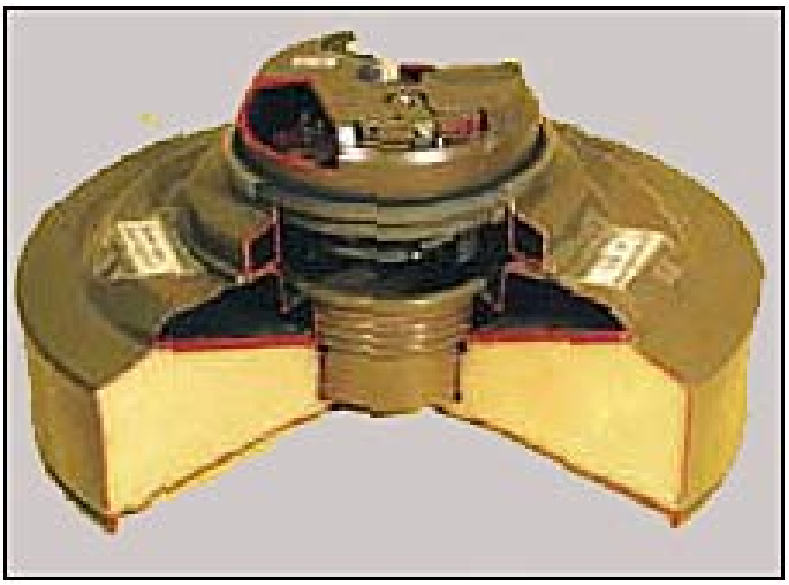	*1- fuze key protection; 2 - marking of the mine on the cover containing the index mine, No of manufacturer, lot, year of manufacture, type of explosive; 3 - the arming mechanism; 4 - the key to disarm the fuze; 5 - side marking - type of mine; 6 - marking on side: manufacturer, lot and year of manufacture, the type of explosive.*
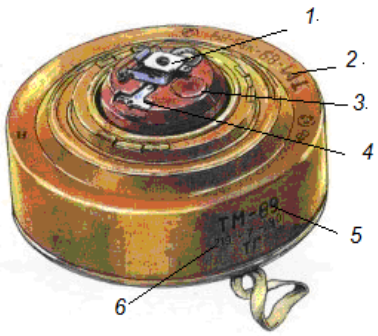	 *Mine TM-89 with fuze VPTM -89 set system VMR -2*

FWP Ammunition

28

AMMUNITION FAMILY HEM

AMMUNITION TYPE	*Land Mine*
DESIGNATION	*Anti-Tank Blast Mine in a Plastic Body*
NAME/ASSIGNED MARK (original)	**PTM 80 P**
COUNTRY of ORIGIN	*Bulgaria*

PTM 80 P

total weight of mine with detonators and transport safety device [*kg*]	*9.8*
explosive type	*TNT*
weight of explosive [*kg*]	*7.2*
diameter [*mm*]	*320*
height of body [*mm*]	*99*
dimension of pressure plate [*mm*]	
activation force greater than [*N*]	*1500-3000 for the fuze MVN -62, MVCh- 62; MVSh -62; magnetic fuze VPTM-80P - the radius 1,5 m*
effect of mine	
type of fuze	*VPTM-80P; MVZ -62, MVCh- 62; MVSh -62;*
type of additional (anti-lift) fuze	

PACKING

Number of rounds in the package	*4*	**Weight of full package [*kg*]**	*49.4*

DESCRIPTION

Antitank blast mine PTM-80 P is the Bulgarian version of the mine TM-62P3. Mine has a hard plastic body. The mine has relatively large fuze well, it means that can be used variety of fuzes including Soviets designed for TM-62 and TM-72. The Bulgarian developed fuze VPTM-80P has small amount of metal. The magnetic fuze has operation time about 24 days until 4.5 V battery is discharged. The magnetic field has a radius about 1.5 m. Mine was used during the Balkan conflict. Exported to many countries in the Middle East and Africa.

COLOR and MARKING

Body colour:	*Olive*
Text colour:	*Black.*

FUZE

Type	**Characteristic**,
MVCh- 62 (MVSch – 62)	*fuze contact, mechanical, pressure*
VPTM-80P	*fuze proximity, magnetic*

SAFETY CONSIDERATION THREAT

Mine PTM 80P can be easily disarmed with unscrew the main fuze with a special key. The dangerous is the use of additional fuzes. Download using hooks or neutralize with explosive charge or trawl.

NOTICE

Magnetic type fuze may not work at from 20 to 40 days (average 24 days), until the battery discharge.

DRAWINGS/CUTAWAY/MARKING/STENCILING:	LEGEND
	1 – fuze; 2 –marking the lot of production, 3 – marking the producer of fuze; 4 – mechanism for disarm the fuze; 5 - ´fuze pressure button; 6 – marking the type of fuze; 7 – marking the year of fuze manufacture; 8 – marking the type of mine - year of mine manufacture; 9 – marking the explosive charge (explosive); 10 – marking the lot of mine manufacture; 11 – marking the mine manufacturer 12 – marking the type of mine.
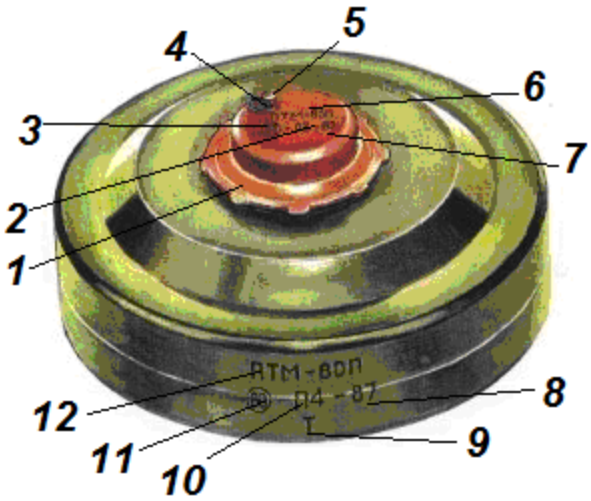	

FWP Ammunition

29

AMMUNITION FAMILY HEM

AMMUNITION TYPE	*Land Mine*
DESIGNATION	*Anti-Tank Blast Mine in a Wooden Body*
NAME/ASSIGNED MARK (original)	**TMD-44**
COUNTRY of ORIGIN	*Former USSR*

TMD-44

total weight of mine with detonators and transport safety device [*kg*]	*9 - 9.7 depends on type of explosive*
explosive type	*TNT/ A-80*
weight of explosive [*kg*]	*4.8 - A-80 / 6.7 -TNT*
height of body [*mm*]	*160*
length of body [*mm*]	*315*
width of body [*mm*]	*280*
dimension of pressure plate [*mm*]	*315 x 280*
activation force greater than [*N*]	*2000 - 5000*
effect of mine	
type of fuze	*MV-5 with detonator MD-2*
type of additional (anti-lift) fuze	

PACKING

Number of rounds in the package	*1*	**Weight of full package [*kg*]**	*10*

DESCRIPTION

Antitank blast mine TMD-44 was developed in former USSR and taken into service in 1944. The mine is similar to antitank blast mine TMD-B. The difference is mainly in pressure boards on the top of mine.TMD-44 has only two of them, TMD- B three. The center pressure board has been removed and replaced by a plastic fuze well, that can accommodate the MV-5 pressure fuze.

COLOR and MARKING

Body colour:	*Olive*
Text colour:	*Black*

FUZE

Type	**Characteristic**
MV-5 with detonator MD-2	*mechanical, contact, pressure*

SAFETY CONSIDERATION THREAT

Simple removal of mine is very dangerous because of its possible provision anti-lift fuze .

NOTICE

The long period of residence in changeable weather conditions causes weakness the body, which increases the risk of fuze activation.

DRAWINGS/CUTAWAY/MARKING/STENCILING:		LEGEND
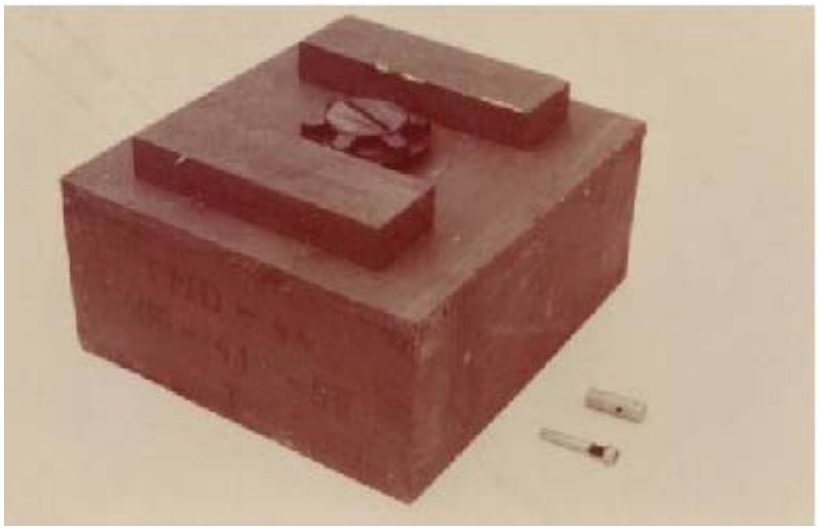 *Mine TMD-44 – Poland*		*detonator MD-2*
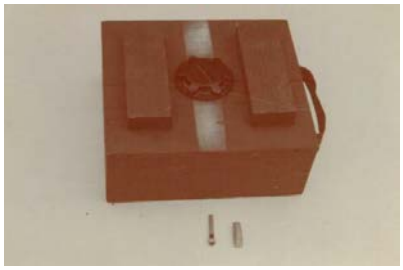 *Mine TMD-44, practice*		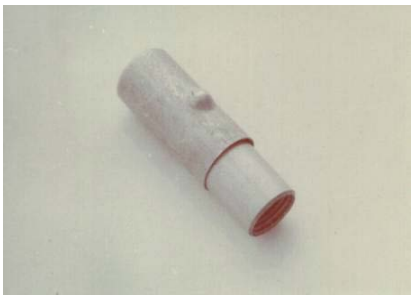 *Fuze MV-5*

FWP Ammunition

30

AMMUNITION FAMILY HEM

AMMUNITION TYPE	*Land Mine*
DESIGNATION	*Anti-Tank Blast Mine in a Wooden Body*
NAME/ASSIGNED MARK (original)	**TMD-B**
COUNTRY of ORIGIN	*Former USSR*

TMD-B	
total weight of mine with detonators and transport safety device [*kg*]	*9 – 9.7*
explosive type	*TNT ; A-80*
weight of explosive [*kg*]	*4.8 – A-80 / 6.7-TNT*
height of body *mm*]	*160*
length of body [*mm*]	*315*
width of body [*mm*]	*280*
dimension of pressure plate [*mm*]	*315 x 280*
activation force greater than [*N*]	*2000 - 5000*
effect of mine	
type of fuze	*MV -5 with detonator MD-2*
type of additional (anti-lift) fuze	

PACKING

Number of rounds in the package	*1*	**Weight of full package [*kg*]**	*10*

DESCRIPTION

Antitank blast wooden mine TMD-B was developed in former USSR. Mine was taken into service in 1943. Mine's construction is similar to mine TMD-41. Often referred like TMD-41 B; TMD-41/43; UTMD-B-44 or UTMD. Mine has centrally located fuze well accessible through a hole in the top of the wooden box. A wooden block is nailed to the bottom of a hinged pressure boards. The block hits to the fuze when pressure is applied to the hinged board. The mine can be fabricated under field conditions with available materials, resulting in various weights and dimensions.

COLOR and MARKING

Body colour:	*Olive*
Text colour:	*Black*

FUZE

Type	**Characteristic**
MV-5 with detonator MD-2	*mechanicak, contact, pressure*

SAFETY CONSIDERATION THREAT

Simple removal of mine is very dangerous because of its possible provision with anti-lift fuze.

NOTICE

The long period of residence in changeable weather conditions causes weakness the body which increases the risk of fuze activation.

DRAWINGS/CUTAWAY/MARKING/STENCILING:

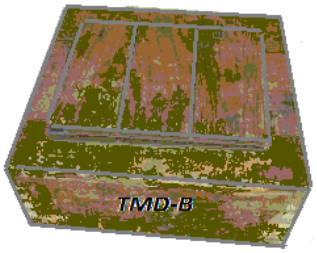

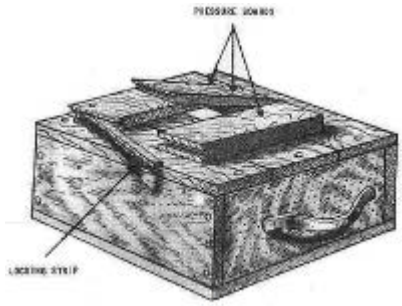

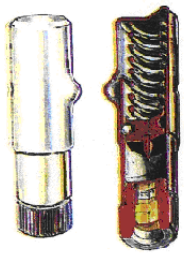

Fuze MV -5

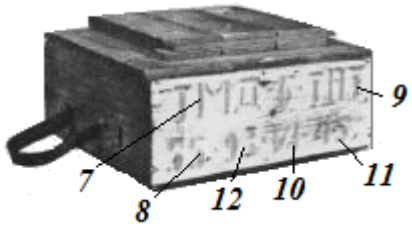

Russian version of the mine TMD-B

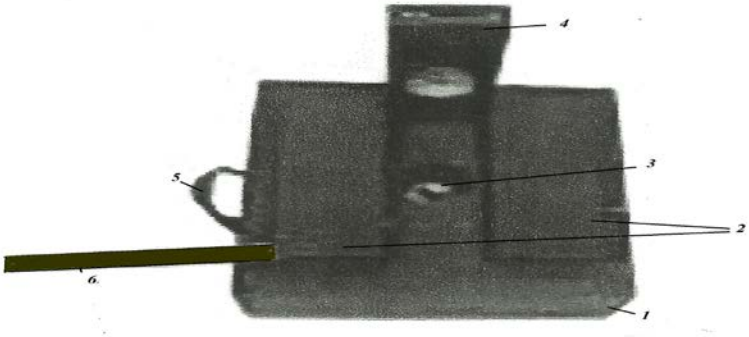

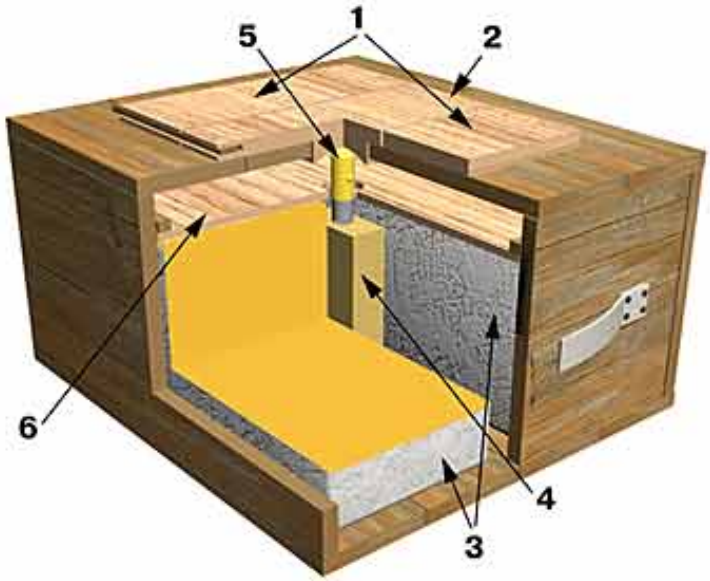

1, two wooden boards
2, hinged pressure board
3, blocks of explosive
4, pressed TNT block
5, MV-5 with a detonator MD-2
6, Spacer

FWP Ammunition

31

AMMUNITION FAMILY HEM

AMMUNITION TYPE	*Land Mine*
DESIGNATION	*Anti-Tank Blast Mine in a Metal (Plastic) Body*
NAME/ASSIGNED MARK (original)	***TYPE-72***
COUNTRY of ORIGIN	*China*

TYPE-72

total weight of mine with detonators and transport safety device [*kg*]	*6.5*
explosive type	*TNT/RDX*
weight of explosive [*kg*]	*5.4*
diameter [*mm*]	*250*
height of body [*mm*]	*100*
dimension of pressure plate [*mm*]	
activation force greater than [*N*]	*3000 - 6000*
effect of mine	
type of fuze	*Pressure, contact*
type of additional (anti-lift) fuze	

PACKING

Number of rounds in the crate		**Weight of full crate [*kg*]**	

DESCRIPTION

Antitank blast mine TYPE-72 was developed and produced in China. Mine can be placed manually or mechanically with standard devices. Mine is made from green plastic, cylindrical with a pull-out handle on the base of the mine. Metal cased mines type 72 are produced too. The central fuze well lies within a raised pressure plate. Fuze function is simple, it is a matter of deforming the pressure plate with a sufficiently long impulse to release a armed striker. Mine has no secondary fuze well. Massively used and encountered in Afghanistan. Exported to countries in Africa, the Middle East, Asia and South America.

COLOR and MARKING

Body colour:	*khaki green; Olive*
Text colour:	*black.*

FUZE

Type	**Characteristic**,
Type 72	*mechanical, contact, pressure*

SAFETY CONSIDERATION THREAT

Mine is very sensitive. Simple removal of mine is very dangerous.

NOTICE

Corrosion may weaken the striking system, making this mine extremely dangerous to handle; it may also make it impossible to remove the fuze from the fuze cavity.

DRAWINGS/CUTAWAY/MARKING/STENCILING:	LEGEND

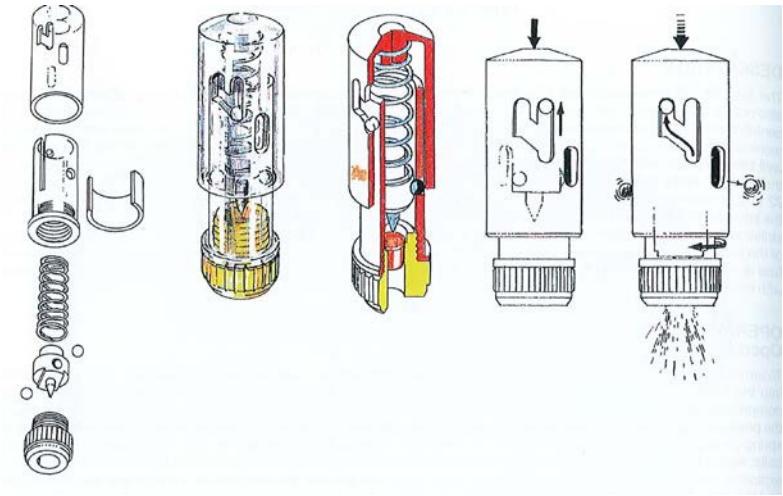

The Type 72 blast resistant fuze

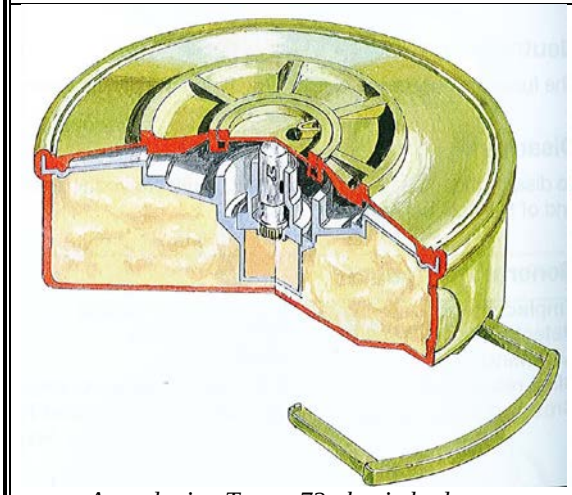

Armed mine Type - 72 plastic body

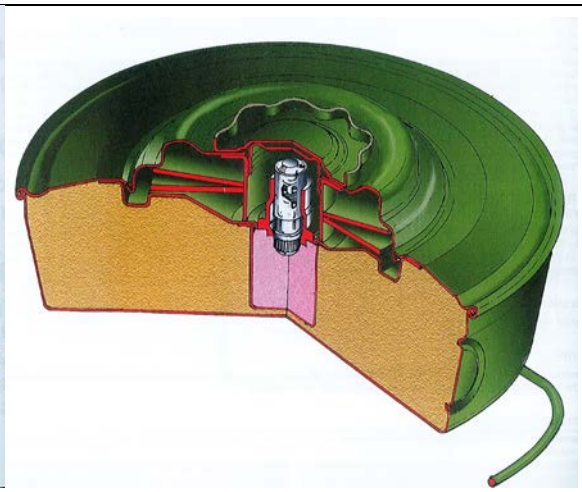

Armed mine Type-72 metal body

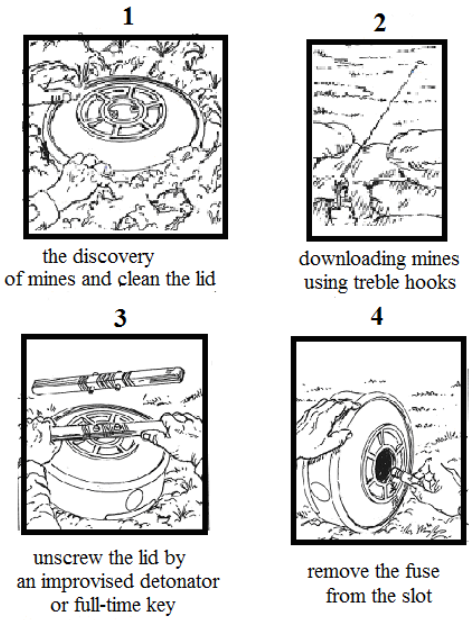

FWP Ammunition

32

AMMUNITION FAMILY HEM

AMMUNITION TYPE	*Land Mine*
DESIGNATION	*Anti-Tank Blast Mine in a Plastic Body*
NAME/ASSIGNED MARK (original)	***PM-60 (K-1)***
COUNTRY of ORIGIN	*Former GDR (EAST GERMANY)*

PM-60	
total weight of mine with detonators and transport safety device [*kg*]	*11.35*
explosive type	*TNT*
weight of explosive [*kg*]	*8*
diameter [*mm*]	*323*
height of body [*mm*]	*117*
dimension of pressure plate [*mm*]	
activation force greater than [*N*]	*1500 - 4000*
effect of	
mine resistance against overpressure in the shock wave [*MPa*]	
type of fuze	*MZ-60, CZ-60 and ZZ-60*
type of additional (anti-lift) fuze	*any pressure type (e.g. type MUV)*

PACKING

Number of rounds in the package	*4*	**Weight of full package [*kg*]**	*58,2*

DESCRIPTION

Antitank blast mine PM-60 was developed and produced in former GDR. The mine was taken into service in 1958. Mine is also known as K-1 mine. Mine consists of two plastic parts connected by 16 plastic screws. Mine can use mechanical fuzes MZ-60, CZ-60 and ZZ-60. MZ-60 has a chemical igniter (ampoule glass with acid). Mine contains a pressure plate, filler shield, filler seal spacer, booster assembly, secondary booster assembly, detonator and fuze. The design of the mine and fuze provides excellent waterproofing. Mine is used in Eritrea and Ethiopia. It's hard to detectable by ferromagnetic devices.

COLOR and MARKING

Body colour:	*Olive*
Text colour:	*Black*

FUZE

Type	**Characteristic**
MZ-60, CZ-60	*mechanical with chemical igniter, contact, pressure*
ZZ-60	*Mechanical, ,contact, pressure*
MUV	*Mechanical, pressure, contact*

SAFETY CONSIDERATION THREAT

Simple removal of mine is very dangerous because of its possible provision anti-lift fuze
.

NOTICE

Corrosion may weaken the striker system, making this mine extremely dangerous to handle; it may also make it impossible to remove the fuze from the fuze well.

DRAWINGS/CUTAWAY/MARKING/STENCILING:		LEGEND
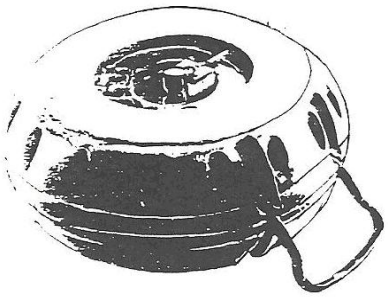	widok z dołu 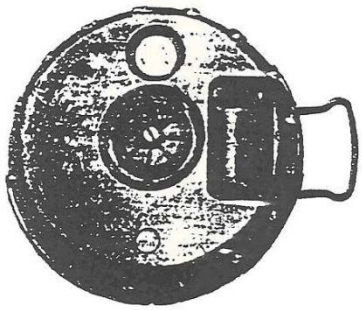	*1 - explosive charge, 2 - booster charge, 3 - glass ampoule with acid, 4 - detonator; 5 – base cork, 6 - plug - cork on additional fuze; 7 - screw merging (16 pcs); 8 - part of base body; 9 - the upper part of the body, 10 - fuze MZ-60, 11 - the lid compression; 12 - transport safety, 13 - carrying handle; 14 - electric detonator; 15 - marking of mine - D - (GDR), 16 - marking the year of manufacture, 17 - marking the lot and manufacturer; 18 - mechanical fuze ZZ-60, 19 - mechanical fuze MZ-60;*
	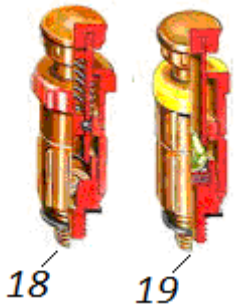	
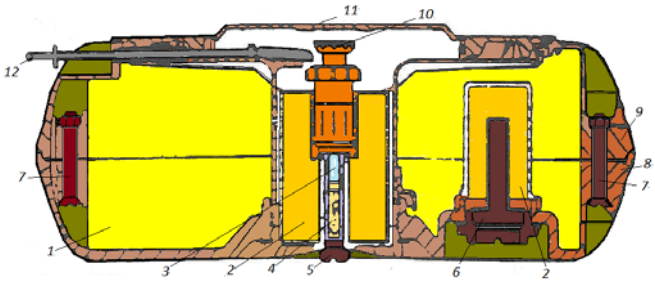		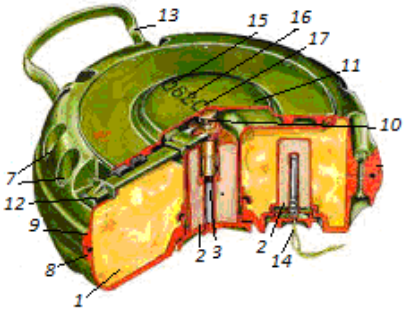

FWP Ammunition

33

AMMUNITION FAMILY HEM

AMMUNITION TYPE	*Land Mine*
DESIGNATION	*Anti-Tank Blast Mine in a Wooden Body*
NAME/ASSIGNED MARK (original)	***YAM-5***
COUNTRY of ORIGIN	*Former USSR*

YAM-5	
total weight of mine with detonators and transport safety device [*kg*]	*6.5 - 7.7*
explosive type	*TNT, Amatol, or other type of explosive*
weight of explosive [*kg*]	*3.6 – 5.5*
length of body[mm]	*490*
width of body [mm]	*190*
height of body [*mm*]	*90*
dimension of pressure plate [*mm*]	
activation force greater than [*N*]	*1360*
effect of mine]	
type of central fuze	*MUV version (other types of the pressure fuzes)*
type of additional (anti-lift) fuze	

PACKING

Number of rounds in the package	*1*	**Weight of full package [*kg*]**	*8*

DESCRIPTION

Antitank blast mine YAM -5 was developed in former USSR during the WWII. This is an improvised mine, performed under the conditions of the war. Four models of the YaM-5 series of wooden antitank mines were produced by the Soviets during World War II. These mines, which differed in overall dimensions and weights, are cased in an oblong wooden box with a hinged lid. The front of the lid has an overlap with a centred recess, which accommodates the protruding striker of the MUV pressure fuze. On each side of the recess there is a staple which retains the peg. The mine detonates by performing a pressure on the lid. In the post war era, a larger YaM-10 mine has been produced. It is of the same basic design as the earlier YaM-5 models.

COLOR and MARKING

Body colour:	*Olive*
Text colour:	*Black*

FUZE

Type	**Characteristic**
MUV with detonator MD-2	*mechanical, contact, pressure*

SAFETY CONSIDERATION THREAT

Mine clearance is dangerous due to the possibility of setting fuze mechanism on small initiation force - about 30-50 N.

NOTICE

A longer period of mine residence in changeable weather condition, make weakens the mine body. The possibility of corrosion of metal parts.

DRAWINGS/CUTAWAY/MARKING/STENCILING:	LEGEND
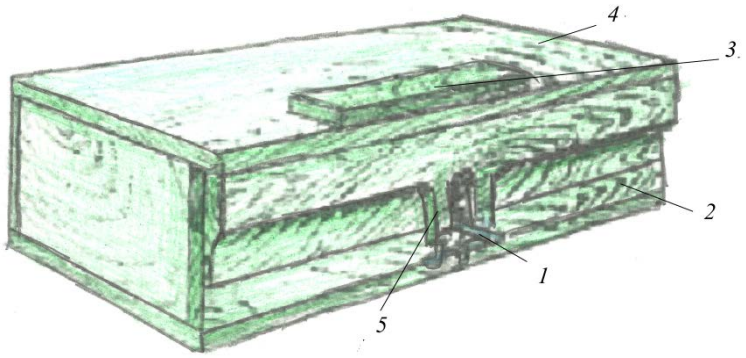 *Mine YAM -5*	*1- fuze - MUV; 2-base part of mine; 3- pressure plate; 4-hinged lid; 5- fuze well;* 6- *explosive charge;* 7- *booster charge;* 8- *blocks supporting the cover;* 9- *striker - mechanism fuze MUV.*
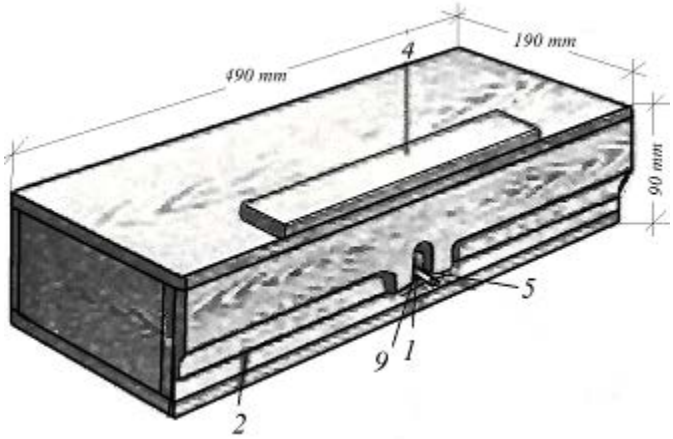	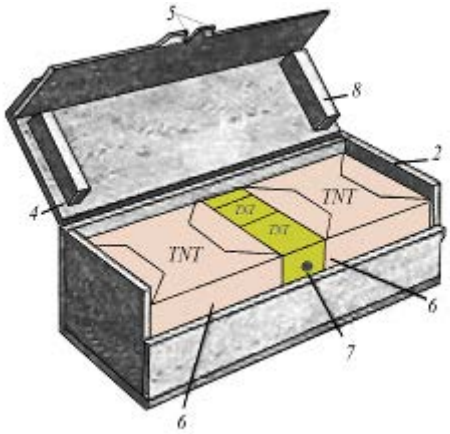

FWP Ammunition

34

AMMUNITION FAMILY HEM

AMMUNITION TYPE	*Land Mine*
DESIGNATION	*Anti- tank Shaped Charge Mine - Directional*
NAME/ASSIGNED MARK (original)	**MPB-ZN**
COUNTRY of ORIGIN	*POLAND*

MPB-ZN

total weight of mine with detonators and transport safety device [*kg*]	*35 (fighting element – 7.2)*
explosive type	*PW 5A (RDX-85%; isobutylene 5%; mineral oil -10%)*
weight of explosive [*kg*]	*4.5*
height of body [*mm*]	*780*
length of body [*mm*]	*640*
width of body [*mm*]	*330*
dimension of pressure plate [*mm*]	
activation force (greater than) [*N*]	
effect of mine:	*Penetration of the 100 mm RHA at a distance from 2 to 100 m*
type of fuze	*Non-contact, electrical*
type of additional (anti-lift) fuze	

PACKING

Number of rounds in the package	*1*	**Weight of full package [*kg*]**	*47*

DESCRIPTION

Antitank shaped charge mine MPB-ZN was developed in Poland. MPB-ZN has non-contact fuze; it is designed for eliminating armoured fighting vehicles by attacking on their sides. The mine is also effective in eliminating vehicles with reactive armour. The mine may be placed in urban areas, mountain passes or forests anytime. Non-contact fuze gives MPB-ZN mine ability to remote detection of approaching targets, using acoustic sensors, which causes warhead to detonate when target cross optic axis of coaxially installed thermal sensor.

Mine is resistant to:

- *Strong magnetic fields produced by radio*
- *Atmospheric discharges*
- *High-voltage electrical transmission lines*
- *Demining by electromagnetic Mine Clearing Blade System*
- *Nearby mine explosion*
- *Strong sound signal.*

COLOR and MARKING

Body colour:	*Olive*
Text colour:	*Black*

FUZE

Type	Characteristic
	electrical acoustic and optical sensors

SAFETY CONSIDERATION THREAT

Removal of mine is very dangerous due to the attributes of tenure and the possibility of remote operation by the operator.

NOTICE

Production: Bydgoszcz Betting Electromechanical "BELMA" SA This is a developed version of mine MPB. Detailed technical data protected by the manufacturer.

DRAWINGS/CUTAWAY/MARKING/STENCILING:	LEGEND
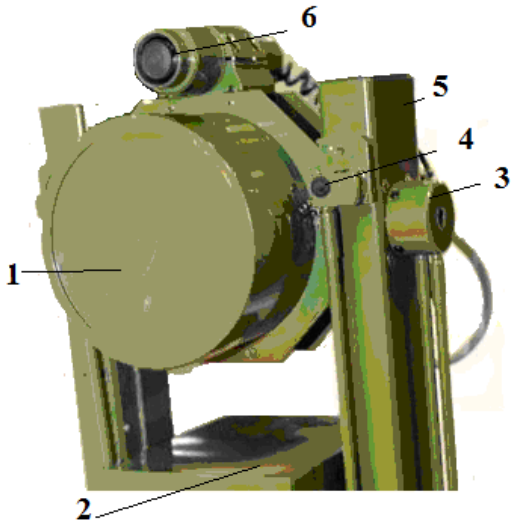	*1 - warhead´ 2 - computer control, 3 - connection to remote control; 4 - acoustic sensor, 5 - base, 6 - optical sensor; 7 - connect the acoustic sensor; 8 - antenna remote control; 9 - frame;*
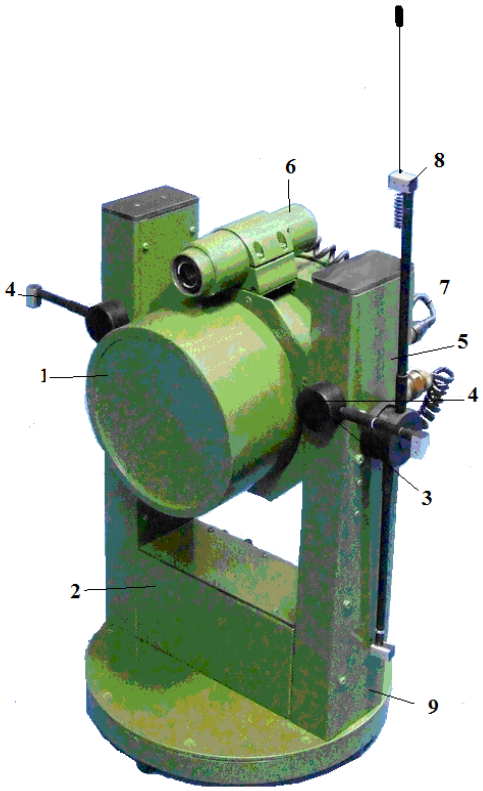	

FWP Ammunition

35

AMMUNITION FAMILY HEM

AMMUNITION TYPE	*Land Mine*
DESIGNATION	*Anti- tank Shaped Charge Directional Mine*
NAME/ASSIGNED MARK (original)	**MPB-ZK**
COUNTRY of ORIGIN	*POLAND*

MPB-ZK

total weight of mine with detonators and transport safety device [*kg*]	*45 (fighting element – 9.8)*
explosive type	*PW 5A (RDX-85%; isobutylene 5%; mineral oil -10%)*
weight of explosive [*kg*]	*5.6*
height of body [*mm*]	*700*
length of body [*mm*]	*450*
width of body [*mm*]	*390*
dimension of pressure plate [*mm*]	
activation force (greater than) [*N*]	
effect of mine	*Penetration of the100 mm RHA plate at a distance of 2 to 50m*
type of fuze	*Contact, electrical, mechanical*
type of additional (anti-lift) fuze	

PACKING

Number of rounds in the package	*1*	**Weight of full package [*kg*]**	*52*

DESCRIPTION

MPB - ZK - Polish antitank mine. It is a prototype like the mine MPB-ZN. The difference is dimensions, weight and fuze system. MPB-ZN (non-contact fuze) and MPB-ZK (contact fuze) are designed to eliminate armoured fighting vehicles by attacking on their side (also with reactive armour). They may be placed in urban areas, mountain passes or forests anytime. The mine MBP-ZK has two fuzes, contact mechanical fuze and electrical fuze. The mine is automatically self-destructed after elapse of set time. The mine has two security stages connected in series, which ensure the safety of operation both during transport and storage. After 1, 10, or 30 days (depending on settings) the mine is self-destructed. It is possible to blast off mine remotely from a distance up to 300 meters.

Mine is resistant to:

- *Strong magnetic fields generated by radio*
- *atmospheric discharges*
- *high-voltage electrical transmission lines*
- *demining by electromagnetic Mine Clearing Blade System*
- *nearby mine explosion*
- *strong sound signal.*

COLOR and MARKING

Body colour:	*Olive*
Text colour:	*Black*

FUZE

Type	Characteristic

SAFETY CONSIDERATION THREAT

Removal of mine is very dangerous due to possibility of remote operation by the operator.

NOTICE

Production: Bydgoszcz Betting Electromechanical "BELMA" SA This is a development version of mines MPB.

DRAWINGS/CUTAWAY/MARKING/STENCILING:	LEGEND

FWP Ammunition

36

AMMUNITION FAMILY HEM

AMMUNITION TYPE	*Land Mine*
DESIGNATION	*Anti-Tank Blast Mine in a Plastic Body*
NAME/ASSIGNED MARK (original)	***MAT-62B***
COUNTRY of ORIGIN	*ROMANIA*

MAT-62B

total weight of mine with detonators and transport safety device [*kg*]	*9.8*
explosive type	*TNT*
weight of explosive [*kg*]	*7.2*
diameter [*mm*]	*340*
height of body [*mm*]	*111*
dimension of pressure plate [*mm*]	
activation force greater than [*N*]	*2000*
effect of mine	*Penetration 35 mm of the RHA plate*
type of fuze	*P -62; MUZ - 62. (MVCh -62);*
type of additional (anti-lift) fuze	

PACKING

Number of rounds in the package	*4*	**Weight of full package [*kg*]**	

DESCRIPTION

The MAT-62B is a Romanian plastic cased circular anti-tank blast mine. It is the copy of the former Soviet TM-62P2. The mine is a relatively simple pressure activated blast antitank mine. The mine has a central fuze well for the bakelite P-62 pressure fuze, which contains a CD-11R detonator. The mine can accept fuzes from the Russian TM-62 and TM-72 series of landmines. The low metal content of the mine makes it difficult to detect. Mine contains secondary fuze wells for antihandling device.

COLOR and MARKING

Body colour:	*Olive (brown)*
Text colour:	*black.*

FUZE

Type	**Characteristic,**
P -62, MUZ - 62. MVCh - 62	*Mechanical, contact, pressure*

SAFETY CONSIDERATION THREAT

Mine is very sensitive. Simple removal of mines is very dangerous.

NOTICE

Corrosion may weaken the striking system, making this mine extremely dangerous to handle; it may also make it impossible to remove the fuze from the fuze well. It is possible for the bakelite fuze to deteriorate in desert conditions, i.e. reducing the activation pressure required to trigger detonation. In such cases there is a possibility that the mine may detonate simply by handling it.

DRAWINGS/CUTAWAY/MARKING/STENCILING:	LEGEND
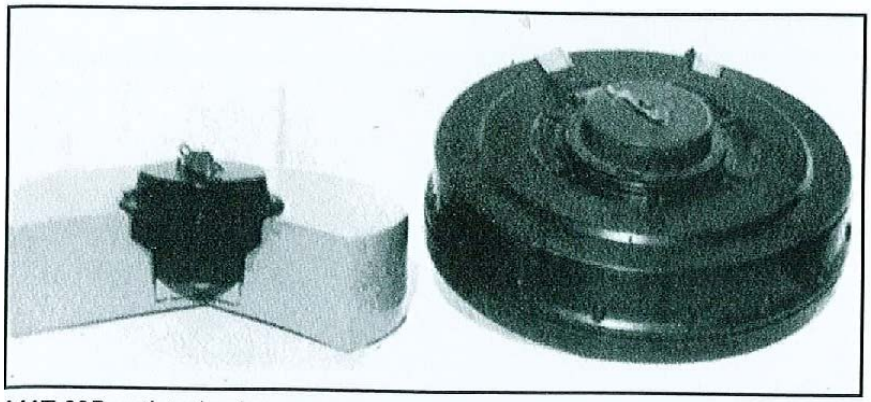 MAT-62B anti-tank mine	
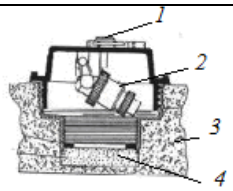 Fuze P-62 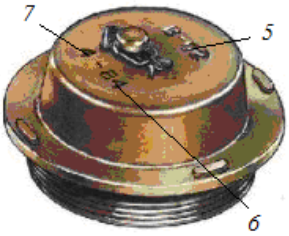	*1 - the fuze with a safety pin, 2 - detonator CD-11R, 3 – mine body; 4 – booster charge, 5 - marking of the fuze - type, 6 -lot , 7 - year*
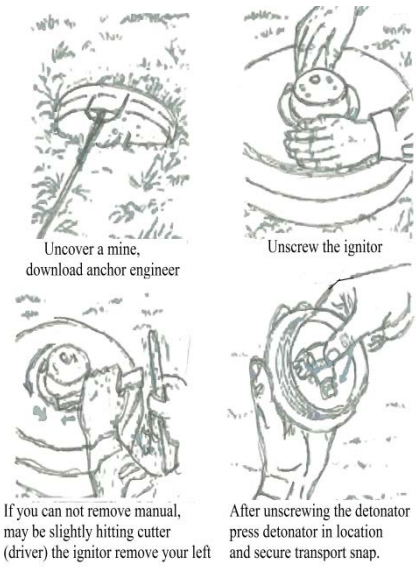 mine disarming	

FWP Ammunition

37

AMMUNITION FAMILY HEM

AMMUNITION TYPE	*Land Mine*
DESIGNATION	*Anti-Tank Blast Mine in a Plastic Body*
NAME/ASSIGNED MARK (original)	***MAT -76***
COUNTRY of ORIGIN	*ROMANIA*

MAT -76

total weight of mine with detonators and transport safety device [*kg*]	*10*
explosive type	*TNT*
weight of explosive [*kg*]	*9.5*
diameter [*mm*]	*320*
dimension of pressure plate [*mm*]	
activation force greater than [*N*]	*2000*
effect of mine	*Penetration 35 mm of the RHA plate*
type of fuze	*P -62; MUZ - 62. (MVCh -62);*
type of additional (anti-lift) fuze	

PACKING

Number of rounds in the package	*4*	**Weight of full package [*kg*]**	

DESCRIPTION

The MAT-76 is a large circular Romanian anti-tank blast mine with minimum metal parts. It is similar to the MAT-62B mine. The mine is a cast block of TNT with a thin coat of fiberglass and resin. The mine has a central fuze well that normally uses a P-62 pressure fuze, although it can be used with any of the fuzes designed for the Russian TM-62 and TM-72 series of mines. The Mat-76 does not have secondary fuze wells, but the thin resin coating can be easily cut and expedient well created on order to fit an antilift device. Practically the mine MAT-76 is caseless version of the mine MAT-62B.

COLOR and MARKING

Body colour:	*Olive (brown)*
Text colour:	*black.*

FUZE

Type	**Characteristic**,
P -62 , MUZ – 62, MVCh -62	*Mechanical, contact, pressure*

SAFETY CONSIDERATION THREAT

Simple removal of mine is very dangerous.

NOTICE

Corrosion may weaken the striker system, making this mine extremely dangerous to handle; it may also make it impossible to remove the fuse from the fuze well.It is possible for the bakelite fuze to deteriorate in desert conditions i.e. reducing the activation pressure required to trigger detonation. In such cases there is a possibility that the mine may detonate simply by handling it.

DRAWINGS/CUTAWAY/MARKING/STENCILING:		LEGEND
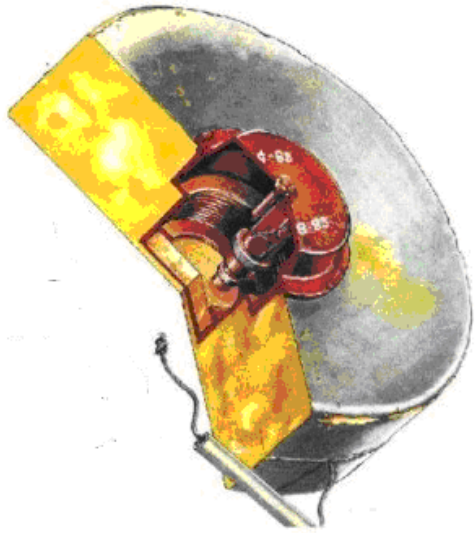	 MAT -72 	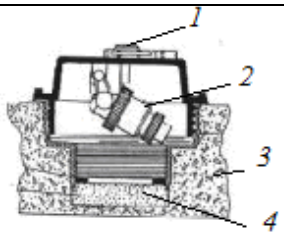 Ignitor P-62 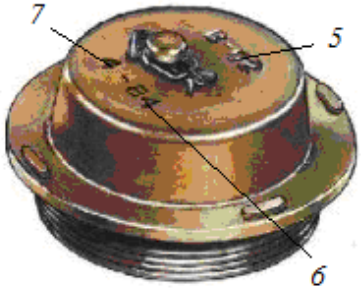 *1 - the fuze with a safety pin, 2 - detonator CD-11R, 3 – mine body; 4 – booster charge, 5 - marking of the fuze - type, 6 -lot , 7 - year*

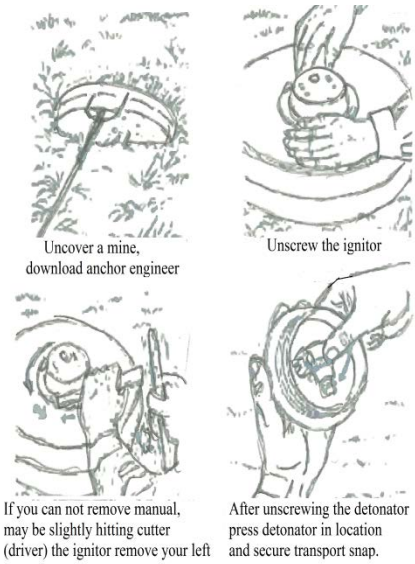

mine disarming

FWP Ammunition

38

AMMUNITION FAMILY HEM

AMMUNITION TYPE	*Land Mine*
DESIGNATION	*Anti-Tank Blast Mine in a Plastic Body*
NAME/ASSIGNED MARK (original)	**TMA-1A**
COUNTRY of ORIGIN	*Former Yugoslavia*

TMA-1A	
total weight of mine with detonators and transport safety device [*kg*]	*6.5*
explosive type	*TNT*
weight of explosive [*kg*]	*5.5*
diameter [*mm*]	*315*
height of body [*mm*]	*100*
dimension of pressure plate [*mm*]	*315*
activation force greater than [*N*]	*1000*
effect of mine	
type of fuze	*UANU - 1 (UTMAH-1)*
type of additional (anti-lift) fuze	*UPM-1, MUV, UPM-2A*

PACKING

Number of rounds in the package	*2*	**Weight of full package [*kg*]**	*22.4*

DESCRIPTION

Antitank blast mine TMA –1A was developed and produced in the former Yugoslavia. The mine has plastic body and distinct corrugated design on top. The mine used fuze UANU - 1 (UTMAH-1). The mine is undetectable by metal detectors, because it has practically no metal parts (detonator only). The mine has additional fuze well in the base of the mine. Used during the Balkan conflicts,

COLOR and MARKING

Body colour:	*olive*
Text colour:	*black.*

FUZE

Type	**Characteristic**,
UANU - 1 (UTMAH-1)	*mechanical, contact, pressure*
MUV	*Anti-lift fuze,*

SAFETY CONSIDERATION THREAT

Simple removal of mine is very dangerous. Defective mine or with broken part of fuze must be disposed on the site.

NOTICE

Long exposure mine in changeable weather conditions (high ambient temperature) can weaken the body of mine.

DRAWINGS/CUTAWAY/MARKING/STENCILING:	LEGEND
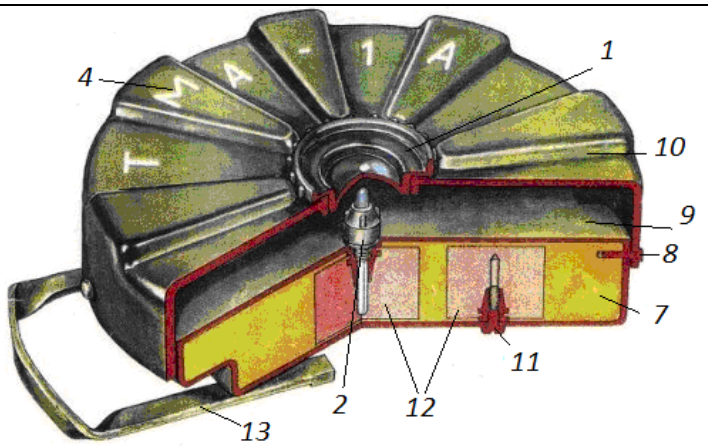	*1 - fuze well , 2 - fuze, 3 - marking of mine manufacturer; 4 -marking the name of mine; 5 - marking the country of manufacture; 6 - base anti-lift fuze; 7 – explosive charge; 8 - pin cover (supporting); 9 - body of mine; 10 - the top cover of mine; 11 - plug for base (additional) fuze; 12 – booster charge; 13 - handle;*
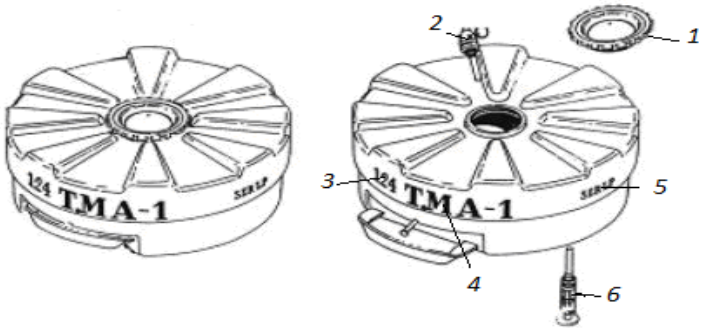 *drawing mine TMA-1A*	*Fuze UANU - 1* 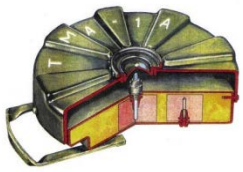 *section mine TMA- 1A* *photo mine TMA- 1A*

DISARMING MINES TMA-1A

discover the mine and clean the cover

download mine by using links

remove the plug fuse with mine

remove the fuse from the mine

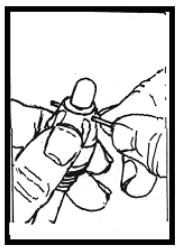

Insert the cotter pin in the socket in the head fuse

FWP Ammunition

39

AMMUNITION FAMILY HEM

AMMUNITION TYPE	*Land Mine*
DESIGNATION	*Anti-tank Blast Mine in a Plastic Body*
NAME/ASSIGNED MARK (original)	**PT-56**
COUNTRY of ORIGIN	*Former Yugoslavia*

PT-56	
total weight of mine with detonators and transport safety device [*kg*]	*7*
explosive type	*TNT (RDX / TNT - 50 :50)*
weight of explosive [*kg*]	*5.4*
length of body [*mm*]	*330*
width of body [*mm*]	*230*
height of body [*mm*]	*140*
dimension of pressure plate [*mm*]	
activation force greater than [*N*]	*1000 - 1200*
effect of mine	
type of fuze	*UANU - 1 (UTMAH-1)*
type of additional (anti-lift) fuze	*MUV*

PACKING

Number of rounds in the package		**Weight of full package [*kg*]**	

DESCRIPTION

Antitank blast mine PT-56 was developed and produced in the former Yugoslavia. Mine has plastic body, with two fuze wells for the UANU - 1 (UTMAH-1), The fuze has the plastic body. In the bottom of the body is additional fuze well. Mine is not detectable by metal detectors. The mine is very similar to the TMA-2 mine.

COLOR and MARKING

Body colour:	*Green - olive*
Text colour:	*black*

FUZE

Type	**Characteristic,**
UANU - 1 (UTMAH-1)	*mechanical, contact, pressure, with plastic body*
MUV	*Anti-lift fuze,*

SAFETY CONSIDERATION THREAT

Removal of all fuzes will render mine safe. Danger –possible used antilift fuze

NOTICE

Mine explode after activation of one of the fuzes.

DRAWINGS/CUTAWAY/MARKING/STENCILING:	LEGEND
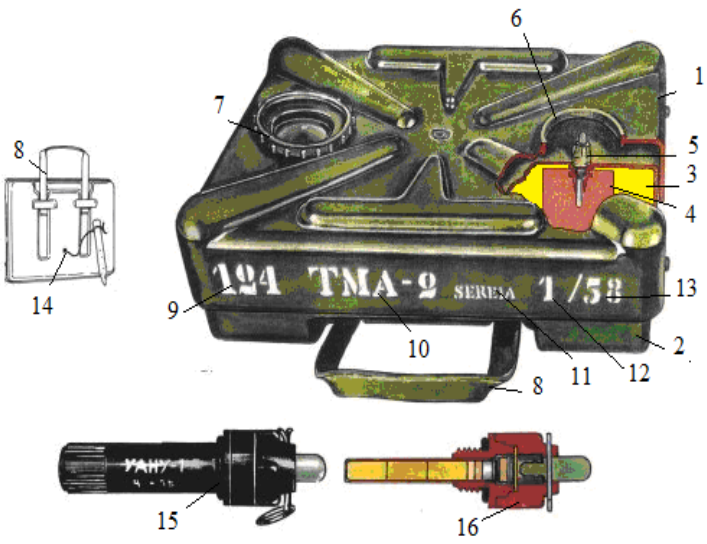	*1- upper cover of mine; 2- mine body; 3- explosive charge; 4- booster; 5- fuze UANU -1; 6- fuze well; 7- second fuze well; 8- handle; 9- marking of mine manufacturer; 10 – marking the type of mine; 11- marking the country of manufacture; 12- marking the lot of manufacture; 13- marking the year of manufacture; 14- picture the mine with anti-lift fuze 15- fuze UANU -1 in transport packet; 16- drawing of fuze UANU -1* 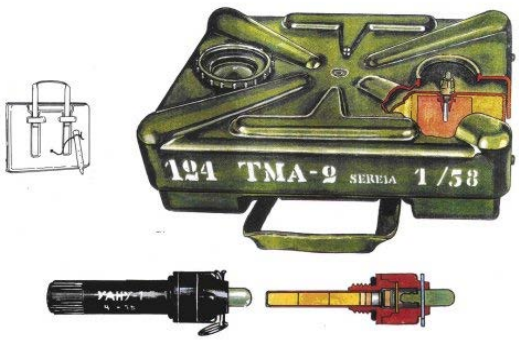 *View mine TMA-2 (PT-56)*
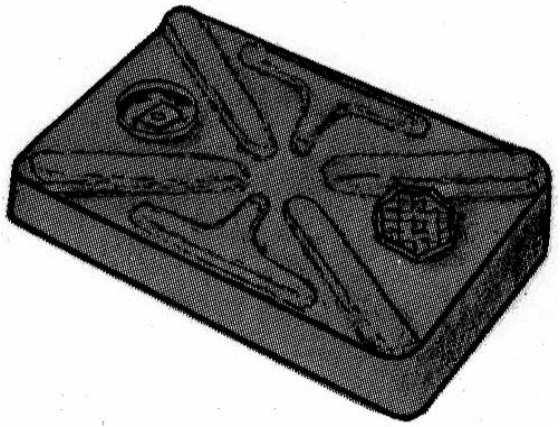 *drawing mine PT-56*	 *View mine* –TMA-2
DISARMING MINES TMA-2 *Uncover mine. clean the cover* *download mine by using links* *remove the plugs from the cover mine* *Insert the cotter pins in the socket in the head and remove the fuse (igniters)*	

FWP Ammunition

40

AMMUNITION FAMILY HEM

AMMUNITION TYPE	*Land Mine*
DESIGNATION	*Anti-tank Blast Mine in a Plastic Body*
NAME/ASSIGNED MARK (original)	**TMA-2**
COUNTRY of ORIGIN	*Former Yugoslavia*

TMA-2

total weight of mine with detonators and transport safety device [*kg*]	*7.5*
explosive type	*TNT (RDX / TNT - 50 :50)*
weight of explosive [*kg*]	*6.65*
length of body [*mm*]	*260*
width of body [*mm*]	*200*
height of body [*mm*]	*140*
dimension of pressure plate [*mm*]	*260 x 200*
activation force greater than [*N*]	*1000 - 2000*
effect of mine	
type of fuze	*UANU – 1 (UTMAH-1)*
type of additional (anti-lift) fuze	*MUV*

PACKING

Number of rounds in the ´package		**Weight of full package [*kg*]**	

DESCRIPTION

Antitank blast mine TMA - 2 was developed and produced in the former Yugoslavia. The mine has plastic body, with two fuze wells for the UANU - 1 (UTMAH-1), The fuze has the plastic body, it is very difficult to detect this mine. In the base of the body is additional fuze well. The upper surface has a corrugated surface.

COLOR and MARKING

Body colour:	*Green - olive*
Text colour:	*black*

FUZE

Type	**Characteristic,**
UANU - 1 (UTMAH-1)	*mechanical, contact, pressure with plastic body*
MUV	*Anti-lift fuze,*

SAFETY CONSIDERATION THREAT

Removal of all fuzes will render mine safe. Danger – possibility the antilift fuze

NOTICE

Mine explosion after activation of one of the used fuze.

DRAWINGS/CUTAWAY/MARKING/STENCILING:	LEGEND
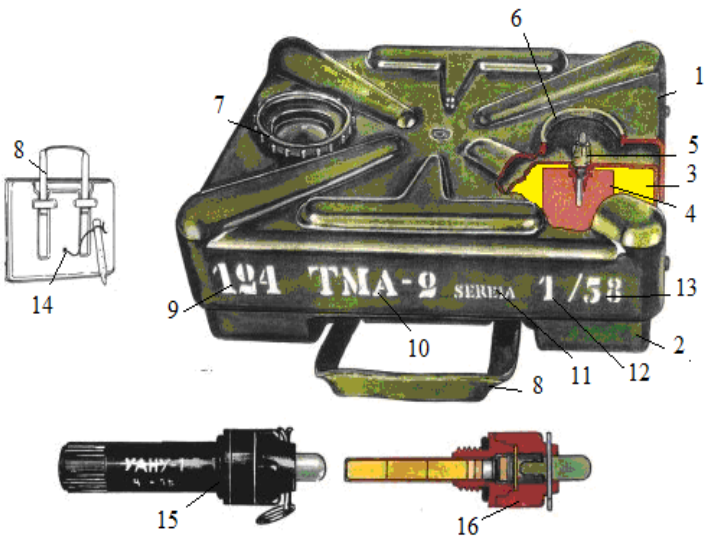	*1- upper cover of mine; 2- main body; 3- explosive charge; 4- booster; 5- fuze UANU -1; 6- fuze well; 7- second fuze well; 8- handle; 9- marking of mine manufacturer; 10 – marking t he type of mine; 11- marking the country of manufacture; 12- marking the lot of manufacture; 13- marking the year of manufacture ; 14- picture the mine with anti-lift fuze 15- fuze UANU -1 in transport packet; 16- drawing of fuze UANU -1.* 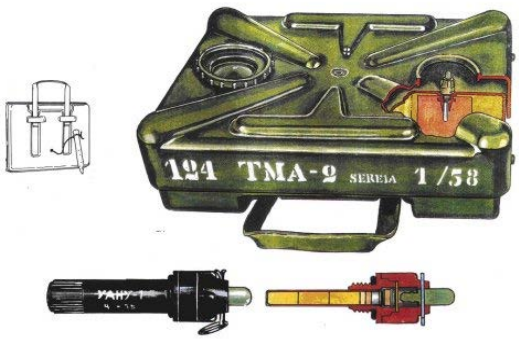 *View mine TMA-2 (TP-56)*
drawing mine TMA-2	*View mine* –TMA-2
DISARMING MINES TMA-2 *Uncover mine. clean the cover* *download mine by using links* *remove the plugs from the cover mine* *Insert the cotter pins in the socket in the head and remove the fuse (igniters)*	

FWP Ammunition

41

AMMUNITION FAMILY HEM

AMMUNITION TYPE	*Land Mine*
DESIGNATION	*Anti-tank Blast Mine in a Plastic Body*
NAME/ASSIGNED MARK (original)	**TMA-3**
COUNTRY of ORIGIN	*Former Yugoslavia*

TMA-3	
total weight of mine with detonators and transport safety device [*kg*]	*7.0*
explosive type	*TNT (TNT / TETRYL)*
weight of explosive [*kg*]	*6.5*
diameter [*mm*]	*265*
height of body [*mm*]	*80*
dimension of pressure plate [*mm*]	
activation force (greater than) [*N*]	*1200 -1800*
effect of mine	
type of fuze	*UTMA-3; UANU - 1 (UTMAH-1)*
type of additional (anti-lift) fuze	*UTMAH-3, UDU-1,UMNOP-1,UMNP-1,UMP-1,2*

PACKING

Number of rounds in the crate	*2*	**Weight of full crate [*kg*]**	*20.4*

DESCRIPTION

Antitank blast mine TMA-3 was developed and produced in former Yugoslavia. The mine has explosive charge and body made from a reinforced cloth with epoxy resin. It has 3 fuzes type UTMAH -3 on the upper side and an additional anti-lift fuze in the middle of the base. Mine can be cut into smaller pieces with a single fuze well and used as IED charges (antipersonnel). In military jargon mine is called "Swiss cheese". It occurs in Albania, Angola, Bosnia, Croatia, Kosovo, Lebanon and Namibia.

COLOR and MARKING

Body colour:	*Green - olive*
Text colour:	*black*

FUZE

Type	**Characteristic,**
UTMAH-3	*The fuze UTMA-3 has a bakelite body. Fuze is mechanical, contact, pressure type*
UANU - 1 (UTMAH-1)	*The fuze UANU - 1 (UTMAH-1) has the body of plastic - glass. Fuze is mechanical, contact, pressure type*
UMOP-1	*Anti-lift fuze,*

SAFETY CONSIDERATION THREAT

Removal of all three fuzes will render mine safe.

NOTICE

The ability to cut the mine into three separate parts, each with a fuze and apply as separate bombs or antipersonnel mines.

DRAWINGS/CUTAWAY/MARKING/STENCILING:	LEGEND
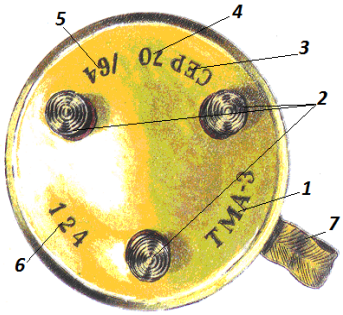	*1 – marking the name of mine; 2 –marking the fuze UTMAH-3, 3 - marking- the country of mine manufacture; 4 - marking the manufacture lot, 5 - marking the year of manufacture ; 6 – marking the manufacturer of mine; 7 - handle; 8 – explosive charge; 9 –booster charge; 10 - cork plug ; 11 - fuze well; 12 – base fuze UNOP-1;*
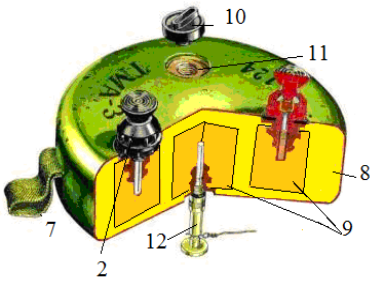	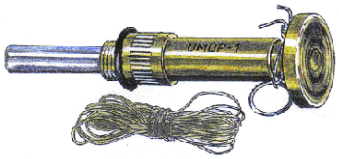 *Fuze UMOP-1* 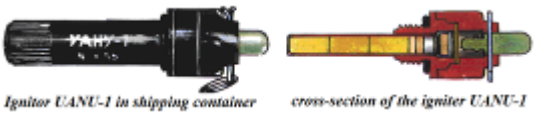 *Igniter UANU-1 in shipping container* *cross-section of the igniter UANU-1*
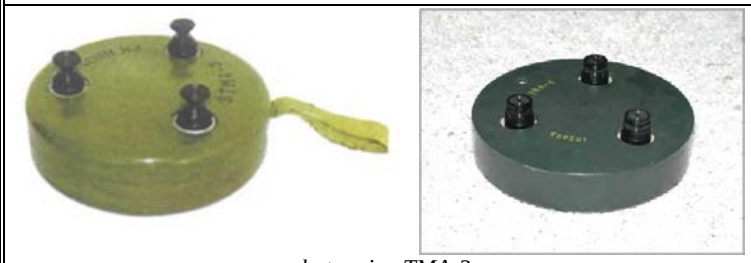 *photo mine TMA-3*	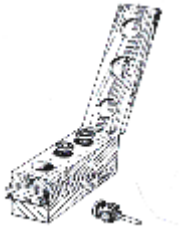 *Container detonator UTMAH-3* *Applied to the mines fuze TMA-3* *-UTMAH -3 a detonator-M-69;* *- UMOP-1-anti-lift;* *-UANU-1 a detonator-M-69;*
DISARMING MINE TMA-3 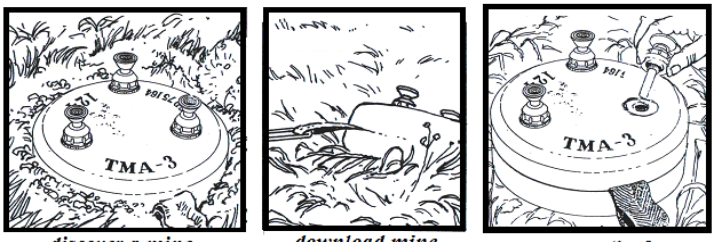 ***discover a mine and clean the cover*** ***download mine by using links*** ***remove the fuse***	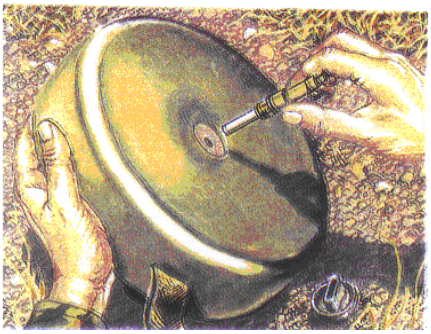 *Inserting the anti-lift fuze bottom to the mines TMA-3*
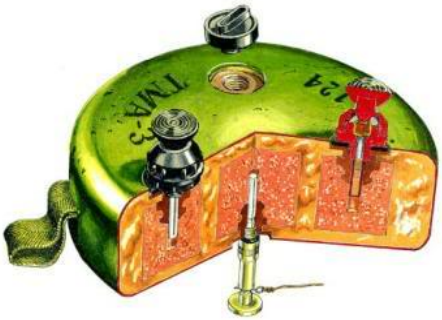 *Section of mine TMA-3*	

FWP Ammunition

42

AMMUNITION FAMILY HEM

AMMUNITION TYPE	*Land Mine*
DESIGNATION	*Anti-tank Blast Mine in a Plastic Body*
NAME/ASSIGNED MARK (original)	**TMA-4**
COUNTRY of ORIGIN	*Former Yugoslavia*

TMA-4	
total weight of mine with detonators and transport safety device [*kg*]	*6.0*
explosive type	*TNT*
weight of explosive [*kg*]	*5.5*
diameter [*mm*]	*285*
height of body [*mm*]	*65*
dimension of pressure plate [*mm*]	
activation force greater than [*N*]	*1200*
effect of mine	
type of fuze	UTMA-4 (UTMAH-4)
type of additional (anti-lift) fuze	*no fuze well on the base*

PACKING

Number of rounds in the package	*2*	**Weight of full package [*kg*]**	*15.4*

DESCRIPTION

Antitank blast mine TMA-4 was developed and produced in the former Yugoslavia. Mine has plastic (bakelite) body. The mine is not detectable by metal detectors. The mine used mainly the fuze UTMAH-4 (developed version of UTMAH-1) with PETN detonator. On the upper side of the mine are three fuze wells.
Used during the Balkan conflicts. This is a developed version of mine TMA-3.

COLOR and MARKING

Body colour:	*Green - olive*
Text colour:	*black*

FUZE

Type	**Characteristic**,
UTMA-4 (UTMAH-1)	*Mechanical, contact, pressure, with plastic body*

SAFETY CONSIDERATION THREAT

Removal of all three fuzes will render mine safe.

NOTICE

The ability to cut the mine into three separate parts, each with a fuze and apply as separate bombs or antipersonnel mines.

DRAWINGS/CUTAWAY/MARKING/STENCILING:		LEGEND
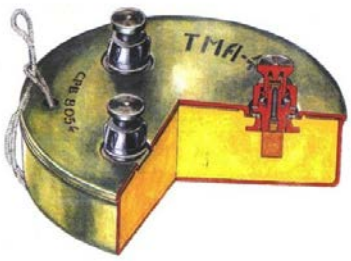 *section mine TMA -4*	*Drawing mine TMA-4*	*1-body of mine; 2 – explosive charge; 3 - booster charge; 4 - fuze UTMA-4 (UTMAH-4); 5 – handle; 6 - marking the name of mine; 7 - marking the name of the country of mine manufacture; 8 - marking the lot of manufacture; 9 - marking the year of manufacture; 10 - marking the type of explosive.*
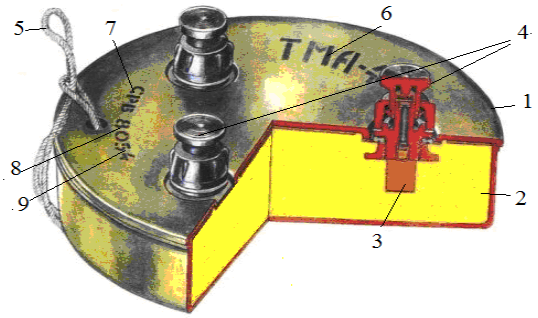		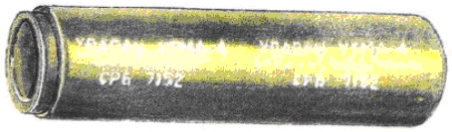 Tube for fuze UTMA-4 with marking
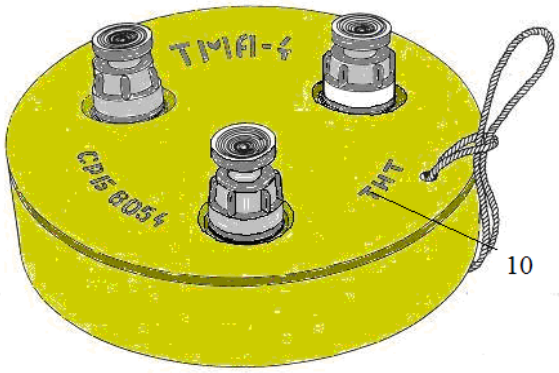 *Drawing mine TMA-4*		*DISARMING MINE TMA-4* 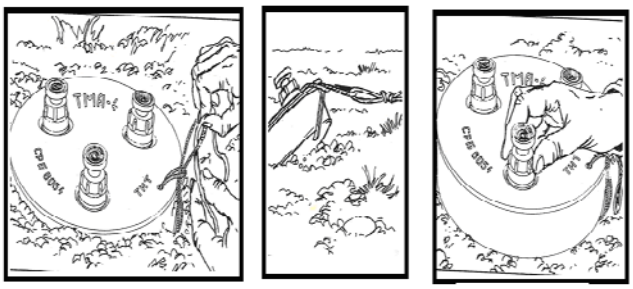 *reveal mine. clean the cover* *download mine by using links* *unscrew fuse*

FWP Ammunition

43

AMMUNITION FAMILY HEM

AMMUNITION TYPE	*Land Mine*
DESIGNATION	*Anti-tank Blast Mine in a Plastic Body*
NAME/ASSIGNED MARK (original)	**TMA- 5**
COUNTRY of ORIGIN	*Former Yugoslavia*

TMA- 5	
total weight of mine with detonators and transport safety device [*kg*]	*6.6*
explosive type	*TNT*
weight of explosive [*kg*]	*5.6*
length of body [*mm*]	*312*
width of body [*mm*]	*275*
height of of body [*mm*]	*113*
dimension of pressure plate [*mm*]	
activation force greater than [*N*]	*1000 -1300*
effect of mine	
type of fuze	*UANU - 1 (UTMAH-1) or other*
type of additional (anti-lift) fuze	

PACKING

Number of rounds in the package		**Weight of full package [*kg*]**	

DESCRIPTION

Antitank blast mine TMA - 5 was developed and produced in former Yugoslavia. Mine has plastic body and on the upper side fuze well for UANU-1 (UTMAH-1). Mine has protruding part at corners, which allow merging the mines together and thus increase the power of explosion. Fuze well - threaded with a diameter of 10 mm. The mine does not have a secondary fuze well for antilift fuze. However external devices can be fitted into the slots at the base of the mine. Used during the Balkan conflicts.

COLOR and MARKING

Body colour:	*Green - olive*
Text colour:	*Black (there are copies of the description of the white)*

FUZE

Type	**Characteristic,**
UANU - 1	*The fuze UANU - 1 (UTMAH-1) having a plastic body - glass. mechanical, contact, pressure*

SAFETY CONSIDERATION THREAT

Simple removal of mine is very dangerous.

NOTICE

It is difficult detectable by ferromagnetic devices. Direct pressure on the head fuze not greater like 6.5 kg

DRAWINGS/CUTAWAY/MARKING/STENCILING:	LEGEND
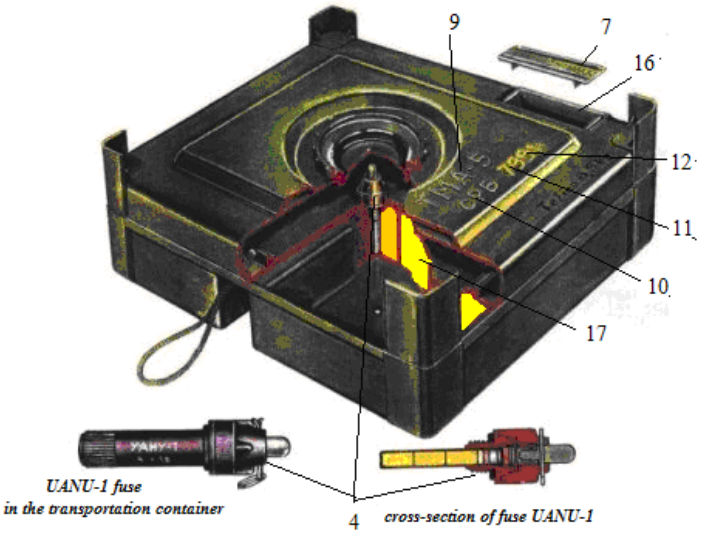	*1 - body of mine; 2 - corner (4 pcs.); 3 –fuze plug; 4 – fuze; 5 – handle; 6 - marking - used fuze; 7 - slot cover on fuze - fuze type, 8 - marking - description of the of force influencing the head of fuze; 9 - marking - the type of mine; 10- marking - manufacture country; 11 - marking- a lot of manufacture; 12 - marking - year of manufacture; 13 - marking-percent of mine filling; 14 – Marking -manufacturer; 15 – marking the type of explosive; 16 – place for fuze transport 17 – explosive charge.*
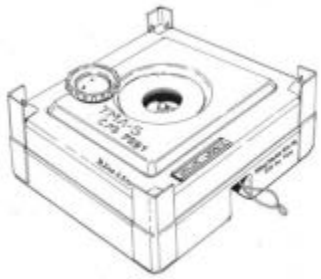 *Drawing mine TMA-5*	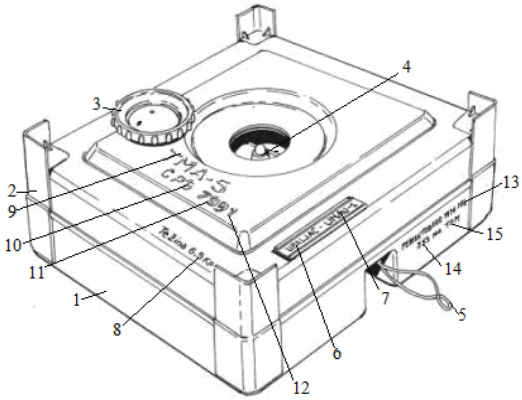

DISARMING MINE TMA -5

reveal mine. clean the cover

download mine by using links

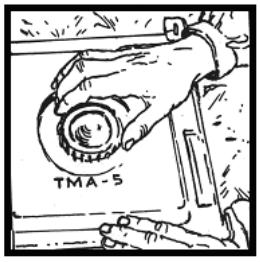

Unscrew the cap from the cover

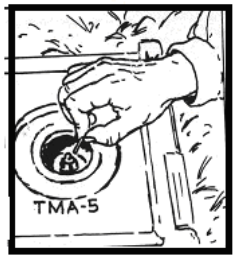

Insert the cotter pin in socket in the head fuse

unscrew fuse

FWP Ammunition

44

AMMUNITION FAMILY HEM

AMMUNITION TYPE	*Land Mine*
DESIGNATION	*Anti-tank Blast Mine in a Metal Body*
NAME/ASSIGNED MARK (original)	**TMM (TMM-1)**
COUNTRY of ORIGIN	*Former Yugoslavia*

TMM (TMM-1)	
total weight of mine with detonators and transport safety device [*kg*]	*8.6*
explosive type	*TNT*
weight of explosive [*kg*]	*5.6*
diameter [*mm*]	*326*
height of body [*mm*]	*90*
diameter disc pressure [*mm*]	*200*
activation force greater than [*N*]	*700-900 – with pressure disc, 1300- 1400 without pressure disc*
effect of mine	
type of fuze	*UTTM-1, UMP-1,MUV,UMP-2A*
type of additional (anti-lift) fuze	

PACKING

Number of rounds in the package	*2*	**Weight of full package [*kg*]**	*25.4*

DESCRIPTION

Antitank blast mine TMM (TMM-1) is product of former Yugoslavia designed to destroy the vehicle chassis systems or combat vehicles. It is a copy of the WWII German Tellermine 42. Mine has a metal body. The mine can be used with or without the screw-on pressure disc. The mine has two secondary fuze wells on the side and base of the mine. Mine is still in service in countries formed after the breakup of the former Yugoslavia, the Arab countries, in the Middle East and China. The mine used mechanical fuze UTTM-1. Used during the Balkan conflicts.

COLOR and MARKING

Body colour:	*Green - olive*
Text colour:	*black*

FUZE

Type	**Characteristic**,
UTTM-1,UMP-1,UMP-2,,	*Mechanical, contact, pressure*
MUV	*tension fuze action anti handling.*

SAFETY CONSIDERATION THREAT

Simple removal of mine is very dangerous.

NOTICE

Yugoslav version of the German mine during the Second World War. After a long period of "lying" in the land is complicated to remove the initiation system. The possibility of using different additional fuzes.

DRAWINGS/CUTAWAY/MARKING/STENCILING:		LEGEND
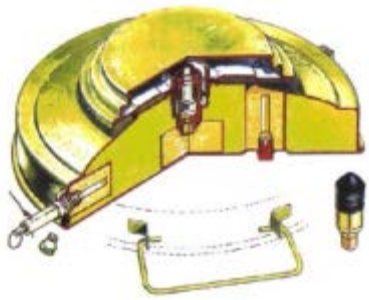 *Section of mine TMM -1*	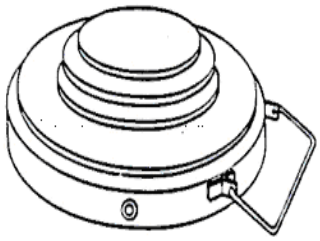 *View German mine T-Mine (Pilz) model. 43 For comparative purposes,*	*1 - body of mine; 2 – explosive charge, 3 – booster charge; 4 - fuze, 5 - fuze type MUV; 6 - fuze well plug ; 7 – base fuze well; 8 – Pressure disc; 9-marking the type of mine; 10-marking the name of the mine; 11 - handle; 12 - marking the country of mine manufacture; 13 - marking manufacture lot, 14 -marking the year of manufacture.*

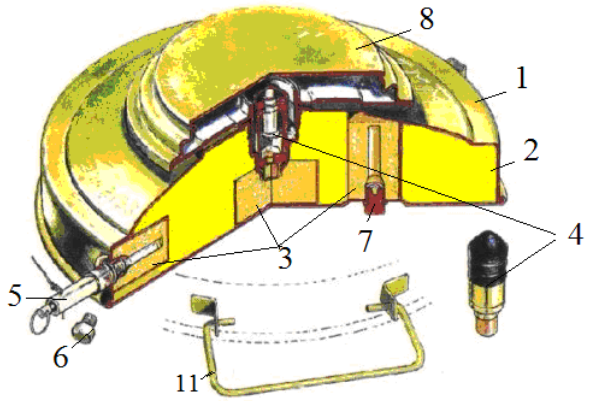

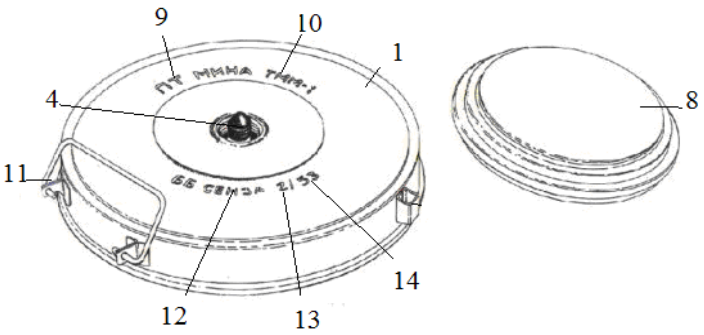

*Drawing mine **TMM (TMM-1)***

View on the mine TMM (TMM-1) after removing the pressure disc

DISARMING MINE TMM -1

reveal mine. clean the cover

download mine by using links

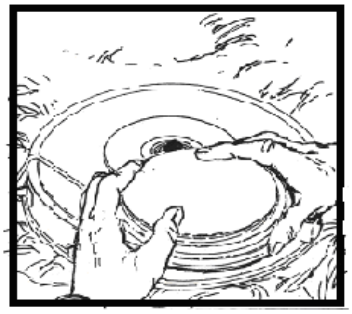

Turn the cap mine

unscrew fuse

FWP Ammunition

45

AMMUNITION FAMILY HEM

AMMUNITION TYPE	*Land Mine*
DESIGNATION	*Anti-tank Shaped Charge Mine in a Plastic Body*
NAME/ASSIGNED MARK (original)	**TMRP-6**
COUNTRY of ORIGIN	*Former Yugoslavia*

TMRP-6

total weight of mine with detonators and transport safety device [*kg*]	*7.26*
explosive type	*TNT*
weight of explosive [*kg*]	*5,1*
diameter [*mm*]	*290*
height of body [*mm*]	*132*
dimension of pressure plate [*mm*]	
activation force greater than [*N*]	*1500 -3500 / with tilt rod fuze 13 – 17*
effect of mine	*penetration up to 40 mm RHA*
type of fuze	*UMP-1; UMOP-1*
type of additional (anti-lift) fuze	

PACKING

Number of rounds in the package	*4*	**Weight of full package [*kg*]**	*43*

DESCRIPTION

Antitank shaped charge mine TMRP-6 was produced in former Yugoslavia. Developed in Sweden (Dynamit Nobel AG), license was sold to the former Yugoslavia. Used during the Balkan conflicts. The mine can be also equipped with 60 cm tilt rod fuze requiring only 13 N for initiation. Tilt rod fuze can be attached to a tripwire, allowing the mine to be used like antipersonnel mine or side-attack mine against vehicles. Armed with the pressure lever type mechanical fuze makes a one unit together with the mine. The striker of the fuze is locked and the explosive chain interrupted, securing safety in storage, transportation and laying. The safety is for 1 or 4 minutes. The mine is placed either manually or from a helicopter. Arming is done automatically. The mine can be laid in dry or swampy ground. The mine is airtight, which makes it resistant to increasing air pressure. The mine may be armed with a secondary fuze and may be electrically activated. Currently produced by Bosnia, Croatia and Kosov.

COLOR and MARKING

Body colour:	*Green - olive*
Text colour:	*Black (there are copies of the description of the white)*

FUZE

Type	**Characteristic**,
UMP-1	*Pressure, contact, mechanical ,*
UMOP-1	*Pressure, contact, mechanical, tilt rod*

SAFETY CONSIDERATION THREAT

Simple removal of mine is very dangerous.

NOTICE

DRAWINGS/CUTAWAY/MARKING/STENCILING:		LEGEND
TMRP-6 *with tilt rod fuze UMOP-1;*	*Mine TMPR-6 in the combat position*	*1 – handle; 2 – cover ring ; 3 - ring retainer cover; 4 – fuze; 5 - socket mechanism fuze; 6 - fuze-arming button; 7 - pressure adjustment screw on the lid; 8 - pressure regulator; 9 - control mechanism; 10 – pin; 11 - ball security spire; 12 - detonator; 13 - detonator; 16 – booster charge; 17 - shaped charge liner; 18 –explosive charge; 19 - fuze UMOP-1; 20 - fuze UMP-1; 21 - detonator M 67 - electrical.*
	Mine ***TMRP-6*** *of fuze UMP-1;*	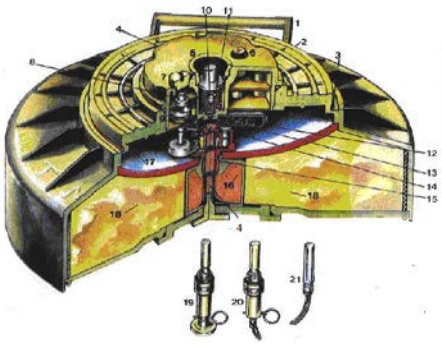 *Section of mine TMRP-6*

DISARMING MINE TMRP-6

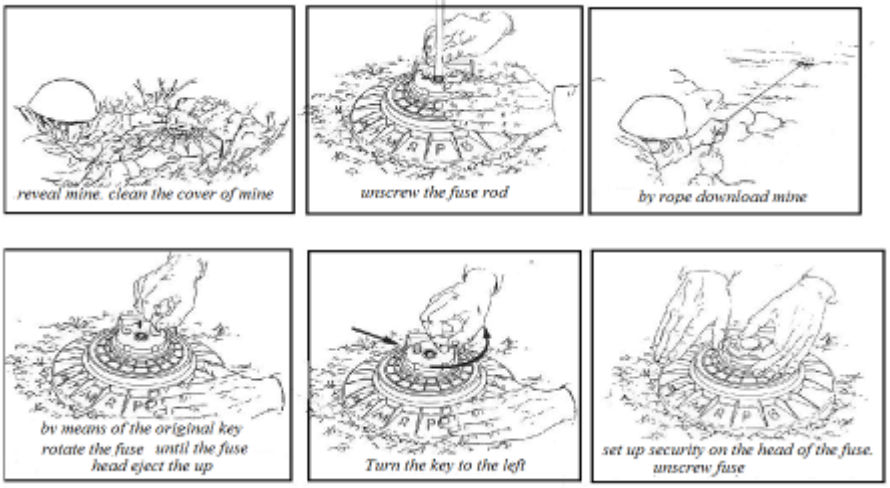

FWP Ammunition

46

AMMUNITION FAMILY ALM/SLM

AMMUNITION TYPE	*Land Mine*
DESIGNATION	*Anti-tank Shaped Charge Mine in a Metal Body Remotely-Delivered*
NAME/ASSIGNED MARK (original)	**MN-111**
COUNTRY of ORIGIN	*Poland*

MN-111	
total weight of mine with detonators and transport safety device [*kg*]	*3,4*
explosive type	*RDX -95%; wax -5%*
weight of explosive [*kg*]	*0.8*
diameter [*mm*]	*116*
height of body [*mm*]	*256*
activation force greater than [*N*]	*Changing the magnetic field*
effect of mine	*Penetration - up to 60 mm RHA plate from a distance 0.5 m*
type of central fuze	*Electronic integrated - activated HSF during the flight mine.*
type of additional (anti-lift) fuze	

PACKING

Number of rounds in the package		**Weight of full package [*kg*]**	

DESCRIPTION

Antitank shaped charge land mine MN-111 was developed and produced in Poland. Mine MN-111 is designed for remote laying of minefields from helicopters. After the mine leaves its carrier canister, its flight path is controlled by a stabilizing/braking system. The mine is set up in ground. The mines can be dropped onto any area, except hard and deep-frozen ground. The mine is initiated under a moving vehicle, at any point of its contour or after a pre-set self-destruction time. It has 3 serial-acting safety stages which ensure safety during transportation or storage, and during land mining. Self-destruction setting is done manually when the mine is loaded into the launcher PLMK - 1 - 6/9 minelaying system overhead PLATAN. The self-destruction time can be set to 6; 12; 24; 48 or 96 hours. There are minor differences in design between the different versions (series production), mainly in the form of stabilizers.

COLOR and MARKING

Body colour:	*Green*
Text colour:	*Black*

FUZE

Type	**Characteristic,**
electronics, integrated	*non contact, electronic, magnetic*

SAFETY CONSIDERATION THREAT

Simple removal of mine is very dangerous. It has the self-destruction and self-neutralization features.

NOTICE

*Mine **MN-111/C** instead of explosive charge in warhead has ankle smoke signals.*
Manufacturer: Bydgoszcz Betting Electromechanical "BELMA" SA Technical details protected by the manufacturer.

DRAWINGS/CUTAWAY/MARKING/STENCILING :

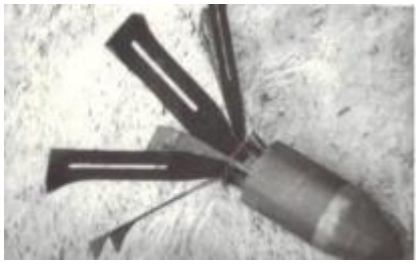

practice mine MN-111

practice mine MN-111 / C

1 – body of mine; 2 – stabilizer fin, 4 – stabilizer fin spring, 5 – stabilizer fin carrier, 6 - locking ring; 7 - marking the mine - the type of mine, 8 - marking- the type of mine; 9 - marking velocity of discharge; 11- marking- the maximum velocity of discharge (x 1 km), 11 - the minimum drop height (x 10 m), 12 - marking the mine - a lot of manufacture, 13 - marking the year of manufacture , 14 - marking the manufacturer

Mine MN-111 in combat position

Mine MN-111-battle

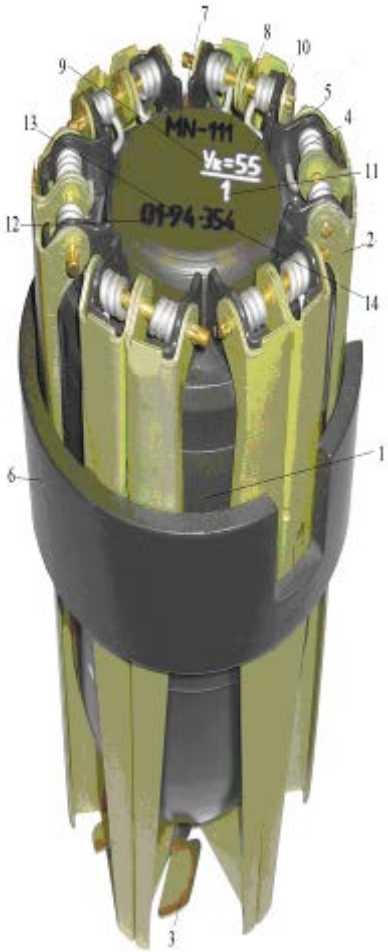

Mock-up mine MN-111 / A (white bar)

Mine practice MN-111 / C (red bar)

Mine MN-111 - practice (white bar)

Mine MN-111 before loading to the launcher PLMK - 1 - 6/99 (Platan)

FWP Ammunition

47

AMMUNITION FAMILY ALM / SLM

AMMUNITION TYPE	*Land Mine*
DESIGNATION	*Anti-tank Shaped Charge Mine in a Metal Body Remotely-delivered*
NAME/ASSIGNED MARK (original)	**MN-121**
COUNTRY of ORIGIN	*Poland*

MN-121	
total weight of mine with detonators and transport safety device [*kg*]	*2.5*
explosive type	*RDX -95%; wax -5%*
weight of explosive [*kg*]	*0.,7*
diameter [*mm*]	*116*
height of body [*mm*]	*183*
dimension of pressure plate [*mm*]	
activation force greater than [N]	*Changing of the magnetic field*
effect of mine	*Penetration up to 60 mm RHA from a distance 0.5 m*
type of fuze	*Electronic integrated.*
type of additional (anti-lift) fuze	

PACKING

Number of rounds in the package		**Weight of full package [*kg*]**	

DESCRIPTION

Antitank shaped charge mine MN-121 was developed and produced in Poland. The mine is designed for remote laying of minefields using aircrafts o rockets. After the mines leave its carrier canister, fall on the ground by parachutes. They can be dropped onto any area, except those densely overgrown with trees and bushes. The mine is equipped with a shaped charge and non-contact self-destroying electronic fuse. The mine is initiated under a moving vehicle, at any point of its contour, or after a pre-set self-destruction time. It has 3 serial-acting safety stages which ensure safety during transportation or storage, and during land mining. Self-destruction setting is done manually when the mine is loaded into the launcher PLMK - 1 - 6/9 minelaying system overhead PLATAN. The self-destruction time can be 6;12;24;48 or 96 hours. After the ground impact the parachute is drop out from mime body.

COLOR and MARKING

Body colour:	*green*
Text colour:	*Black (there are copies of the description of the white-instructional)*

FUZE

Type	**Characteristic**,
electronics, integrated	*non contact, electronical, magnetic*

SAFETY CONSIDERATION THREAT

Simple removal of mine is very dangerous. It has the self-destruction and self-neutralization features.

NOTICE

*Mine **MN-121/C** instead of charge MV has smoke contents that signalizing the activation of mine.*
Manufacturer: Bydgoszcz Betting Electromechanical "BELMA" SA Technical details protected by the manufacturer.

DRAWINGS/CUTAWAY/MARKING/STENCILING:		LEGEND
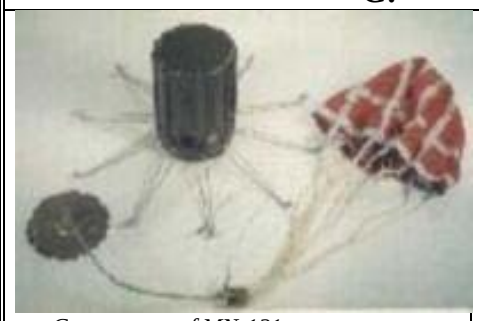 *Components of MN-121*	*Mine MN-121 in combat position*	*1 – parachute; 2 - parachute cord; 3 – body of mine; 4 - springs stabilizer -10 pcs.; 5-steel cable; 6 - parachute expelling mechanism (expelling charge); 10 - marking mine the type and origin; 11 - marking the month (lot) of mine manufacture; 12 - marking the mine year of manufacture; 13 - marking the mine - the manufacturer.*
mine of MN-121 in combat position	*Mine MN-121 - battle the complex base-springs*	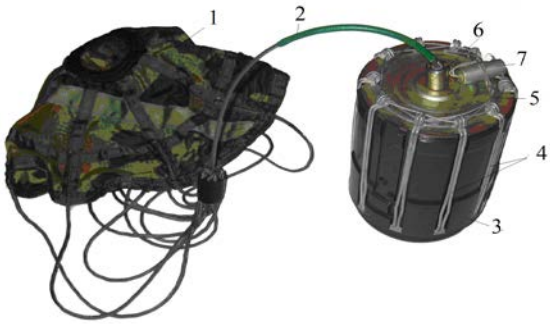 *description of mine MN-121*
set rocket launcher BM-21	*fuze into the tray with the BM-21 Caesar-100M1*	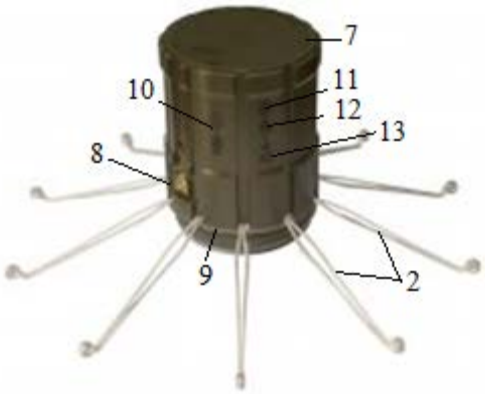 *description of mine MN-121*

Mine MN-121/O mockup

Mine MN-121/O mockup for loading into launcher

practice mine MN-121/C (marked with red bar)

FWP Ammunition

48

AMMUNITION FAMILY SLM

AMMUNITION TYPE	*Land Mine*
DESIGNATION	*Anti-tank Shaped Charge Mine in a Metal Body Remotely - Delivered*
NAME/ASSIGNED MARK (original)	**MN-123**
COUNTRY of ORIGIN	*Poland*

MN-123	
total weight of mine with detonators and transport safety device [*kg*]	*3.7*
explosive type	*RDX -95%; Wax -5%*
weight of explosive [*kg*]	*0.8*
diameter [*mm*]	*180*
height of body [*mm*]	*90*
dimension of pressure plate [*mm*]	
activation force greater than [N]	*Changing the magnetic field*
effect of mine	*Penetration - up to 70 mm RHA plate from a distance of 0.5 m*
type of fuze	*Electronic integrated.*
type of additional (anti-lift) fuze	

PACKING

Number of rounds in the package	*5*	**Weight of full package [*kg*]**	*26.7*

DESCRIPTION

Antitank shaped charge mine MN -123 was developed and produced in Poland. Mine is designed for scatter-laying anti-tank mine fields. Mine canister contains 5 MN-123 mines, electrical system for dispensing individual mines and setting self-destruction time, based on a program of a controller installed in the base vehicle. The canister allows mines to be dispensed from a barrel dispenser installed on the Engineering Mining System. Each dispenser has a mechanically and electrically interconnected set of 20 barrels for dispensing and disassembling of MN-123 mine canisters. A moving vehicle with mine dispensers can lay a minefield along its route, about 70 m wide, while ensuring its own safety. A design of dispensers allows mines to be laid on both sides of the vehicle and behind the vehicle. A vehicle passing over the mine causes distortion of the magnetic field followed by mine explosion.

COLOR and MARKING

Body colour:	*Green*
Text colour:	*Black (copies of educational and instructional have a white or red stripe)*

FUZE

Type	**Characteristic**,
electronics, integrated	*unable to disarm*

SAFETY CONSIDERATION THREAT

Simple removal of mine is very dangerous. It has the self-destruction and self-neutralization features.

NOTICE

Mine MN-123 / C instead of explosive charge warhead has smoke contents that signalizing the activation of mine. Manufacturer: Bydgoszcz Betting Electromechanical "BELMA" SA Technical details protected by the manufacturer.

DRAWINGS/CUTAWAY/MARKING/STENCILING:	LEGEND
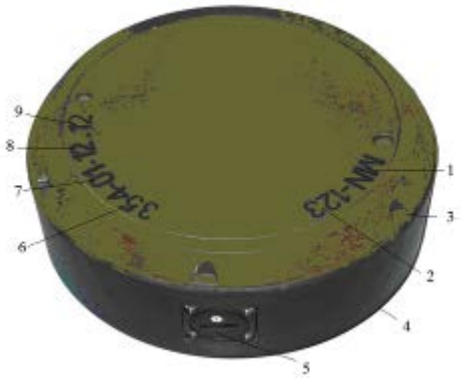 *Description mines*	*1 - marking – type of mine; 2 -marking- the kind mines; 3 - slot bracket; 4 – body of mine; 5 - power socket; 6 - marking the mine manufacturer ; 7 - marking the mine - the day of manufacture (lot); 8 - marking the mine - the month of manufacture; 9 – marking the mine - year of manufacture*
 Mina battle MN-123	 *View mines a set of Croton on TRI*
 Mine practice MN-123 / C (red bar) *Mock-up mine MN-123 / A (white bar)*	 *Canister with mines* *Canisters with mines MN-123 are mounted on overhead conveyor minelaying (TMN). The cassette consists of 5 mines and 5 ejectors, lid of the cylindrical housing and wiring connecting the contact assembly of the cartridge ejector pyrotechnic electrical circuits. Via electrical signals are transmitted programming time self-destruction of the tiller overhead conveyor minelaying TMN to any mines and throwing ejectors signals. Throwing cassette enables launcher barrel mine (depending on the type of transport may be mounted with 4 - 6 launcher). Each launcher includes a mechanically and electrically coupled set of 20 barrels to accommodate cassettes with mines MN-123. The possibility of laying a minefield route parallel to the waist with a width of approximately 70 m to the left and right sides of the vehicle.*

FWP Ammunition

49

AMMUNITION FAMILY HEM

AMMUNITION TYPE	*Land Mine*
DESIGNATION	*Anti-tank Shaped Charge Mine in a Metal Body*
NAME/ASSIGNED MARK (original)	**MR-123**
COUNTRY of ORIGIN	*Poland*

MR-123	
total weight of mine with detonators and transport safety device [*kg*]	*3.8*
explosive type	*RDX -95%; wax -5%*
weight of explosive [*kg*]	*0.9*
diameter [*mm*]	*167*
height of body [*mm*]	*90*
dimension of pressure plate [*mm*]	
activation force greater than [*N*	*Changing the magnetic field*
effect of mine	*Penetration up to 60 mm RHA plate from a distance 0.5 m*
type of fuze	*Electronic integrated. immediate action MR 123/1 or delayed - MR 123 /2*
type of additional (anti-lift) fuze	

PACKING

Number of rounds in the package	*1*	**Weight of full package [*kg*]**	*4.6*

DESCRIPTION

Antitank shaped charge mine MR -123 was developed and is produced in Poland. Mine is placed manually. The mine can be placed either on or under the surface, depending on needs. Mine is equipped with a bi-directional shaped charge, double-acting non-contact electronic self-destroying and self-neutralising fuze. Activation occurs within the contours of a vehicle moving above or upon the elapse of self-destruction set time. Mine has two degrees of safety. Fuze is programmed using mechanical switches on the side of the mine. Production since 2009.

COLOR and MARKING

Body colour:	*green*
Text colour:	*black*

FUZE

Type	**Characteristic**,
electronics, integrated	*unable to disarm*

SAFETY CONSIDERATION THREAT

Simple removal of mine is very dangerous. It has the self-destruction and self-neutralization

NOTICE

Mine MR-123/ C instead of explosive charge has smoke contents that signalizing the activation of mine.
Manufacturer: Bydgoszcz Betting Electromechanical "BELMA" SA Technical details protected by the manufacturer.

DRAWINGS/CUTAWAY/MARKING/STENCILING:		LEGEND
Mine battle MR-123.1 no additional markings	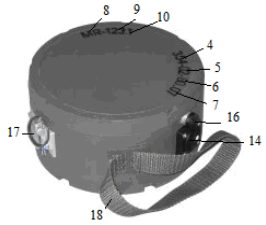	*2 - the plug for mine electronic circuit well, 4 - marking the mine - manufacturer; 5 - marking the mine - the day of manufacture (lot), 6-marking the mine - month of manufacture , 7 - marking the mine - year of manufacture; 8 –marking the mine - the type of mine; 9 - marking the mine - a kind of mine, 10 - marking the fuze - a kind of fuze (1-immediate action); 11 - the top cover mine;; 13 - base cover of mine; 14 - the battery cover; 16 - a mechanism for setting the mine; 17 - handle security; 18 – handle strap.*
Mine an exercise MR-123 / C (red bar)	*Mock-up Mine School MR-123 / O (white bar)*	
The base mine MR-123	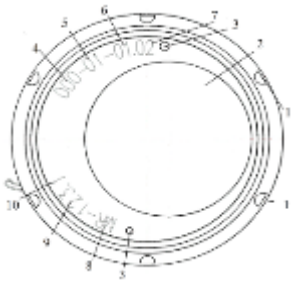 *The base mine MR-123*	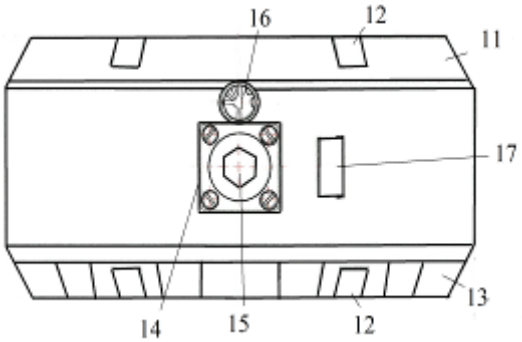 *side view mine the MR-123.*

FWP Ammunition

50

AMMUNITION FAMILY SLM

AMMUNITION TYPE	*Land Mine*
DESIGNATION	*Anti-tank Shaped Charge Mine in a Metal Body Remotely-Delivered*
NAME/ASSIGNED MARK (original)	**KB – PTM (ABABEEL)**
COUNTRY of ORIGIN	*Former Yugosłavia*

KB-PTM (ABABEEL)	
total weight of mine with detonators and transport safety device [*kg*]	*1.7*
explosive type	*TNT/RDX (50:50)*
weight of explosive [*kg*]	*0.68*
diameter [*mm*]	*120*
height of body [*mm*]	*116*
dimension of pressure plate [*mm*]	
activation force greater than [N]	*Changing the magnetic field, the duration of action 72 h*
effect of mine	*Penetration up to 400 mm RHA plate from a distance of 0.8 m*
type of fuze	*Electronic integrated. immediate action*
type of additional (anti-lift) fuze	

PACKING

Number of rounds in the package		**Weight of full package [*kg*]**	

DESCRIPTION

Antitank shaped charge mine KB-PTM (Yugoslavia antitank mine - ABABEEL) was developed and produced in former Yugoslavia. The mine was placed like submunition in missile (rocket) M-87--AT (24 pcs) fired from MLRS ORKAN known in IRAK like ABABEEL. Remotely-delivered, designed to destroy armoured vehicles by hitting with a plate charge mechanism the bottom of the vehicle. It has a magnetic fuze. Activation occurs when the electromagnetic fields is interfered. The duration of action fuze depends on the battery, it is about 72 hours. It has the self-destruction mechanism. The stabilizer of mine keeps mine in attack position (upwards fuzes).
Production former Yugoslavia (now Serbia.)

COLOR and MARKING

Body colour:	*Green - olive*
Text colour:	*Black (there are copies of the description of the white)*

FUZE

Type	**Characteristic**,
	Non contact,electronic, magnetic

SAFETY CONSIDERATION THREAT

Mine is very sensitive. Simple removal of mine is very dangerous.

NOTICE

Activation of mine is under the vehicle. Effective in a position perpendicular to the surface.

DRAWINGS/CUTAWAY/MARKING/STENCILING:		LEGEND
	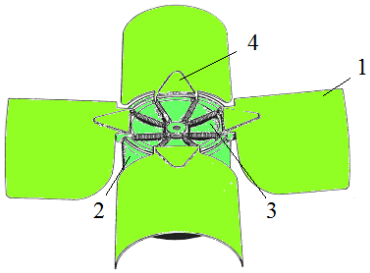 *view of the bottom of the mine KB-PTM*	*1 – stabilizer (4 fins), 2 - body of mine;3 – fuze (mechanism with shaped charge liner) 4 - spring clamp stabilizer.*
	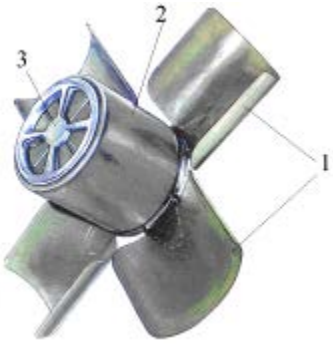	 *View of mines in combat position* *Mine - an unexploded - wrong angle collapse* 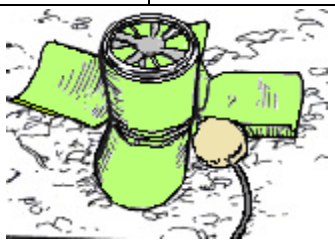 *engagement point explosive charge*

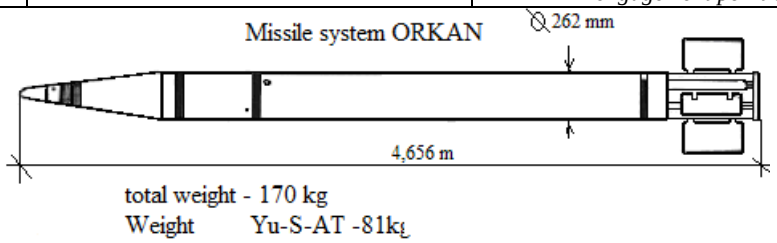

FWP Ammunition

51

AMMUNITION FAMILY SLM

AMMUNITION TYPE	*Submunition*
DESIGNATION	*Dual Purpose Submunition - DPICM*
NAME/ASSIGNED MARK (original)	**KB-1**
COUNTRY of ORIGIN	*Former Yugoslavia*

KB-1	
total weight of submunition with detonators and transport safety device [*kg*]	*0.214*
explosive type	*Composite B (TNT/HDX -40 : 60)*
weight of explosive [*kg*]	*0.0305*
diameter [*mm*]	*40*
height of body [*mm*]	*90*
dimension of pressure plate [*mm*]	
activation force greater than [N]	*hitting a hard surface*
effect of mine	*Penetration up to 76 mm RHA plate*
type of central fuze	*mechanical, inertia during impact*
type of additional (anti-lift) fuze	

PACKING

Number of rounds in the package		**Weight of full package [*kg*]**	

DESCRIPTION

DPICM (Dual purpose Improved Conventional Munition) submunition KB-1 was developed and produced in former Yugoslavia. The dual purposes are antipersonnel and antiarmour. The outer sleeve of the sub munition is its anti-personnel fragmentation (a matrix of ball bearings set into plastic). The interior has a small amount of high explosive above an armour-piercing shaped charge and shaped charge liner. Submunition has a stabilized ribbon and a simple fuze mechanism designed to detonate on an impact. This submunition was packed in rocket M-87-ICM-AT (288 pcs) fired from MLRS ORKAN. Improved submunition was used like rifle grenade warhead in Bosnia (M93 KB-1).

COLOR and MARKING

Body colour:	*Green - olive*
Text colour:	*Black (there are copies of the description of the white)*

FUZE

Type	**Characteristic,**
Inertial	*mechanical, contact, impact*

SAFETY CONSIDERATION THREAT

Simple removal of submunition is very dangerous. Ejected striker in fuze (13) makes a submunition a little resistance to shocks.

NOTICE

The mechanism of the fuze – inertial force. When the submunition impacts by correct angle on hard target immediately starts explosion. Submunition has elements of destruction manpower - steel balls of about 260 pcs.

DRAWINGS/CUTAWAY/MARKING/STENCILING:		LEGEND
 view submunition KB-1	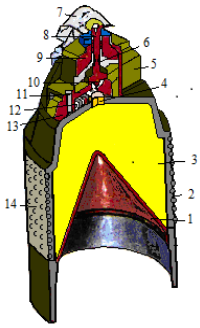	*1 - shaped charge liner; 2 – body of mine with steel balls, 3 – explosive charge; 4 - detonator, 5 – fuze body; 6 – narrow part of striker; 7 – ribbon (stabilizer belt) 8 – 10 main parts of striker, 11 – 13 transport safety; 14- steel balls*
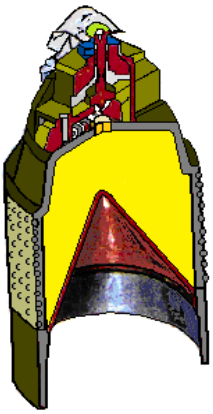 *Cross section of submunition KB-1*	mina M85 Izrael *for comparison - submunition M 85-Israel*	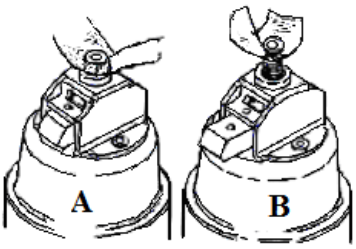 *Fuze. In transport position (A) Armed (advanced fuse-B)*

FWP Ammunition

52

AMMUNITION FAMILY SLM

AMMUNITION TYPE	*Submunition*
DESIGNATION	*Dual Purpose Submunition – DPICM in a Metal Body*
NAME/ASSIGNED MARK (original)	**KB-2**
COUNTRY of ORIGIN	*Former Yugoslavia*

KB-2	
total weight of submunition with detonators and transport safety device [*kg*]	*0.198*
explosive type	*Composite B (TNT/HDX - 40 : 60)*
weight of explosive [*kg*]	*0.0305*
diameter [*mm*]	*40*
height of body [*mm*]	*85*
dimension of pressure plate [*mm*]	
activation force greater than [*N*]	*hitting a hard surface*
effect of mine	*Penetration up to 76 mm RHA plate*
type of fuze	*mechanical, inertial during impact*
type of additional (anti-lift) fuze	

PACKING

Number of rounds in the package		**Weight of full package [*kg*]**	

DESCRIPTION

DPICM (Dual purpose Improved Conventional Munition) submunition KB-2 was developed and produced in former Yugoslavia. The dual purposes are antipersonnel and antiarmour. The internal prefragmented body of the submunition is created for its anti-personnel fragmentation effect. The submunition has a small amount of high explosive above an armour-piercing shaped charge and shaped charge liner. Submunition has a stabilized ribbon and a simple fuze mechanism designed to detonate on impact. This submunition was packed in rocket M-87-ICM-AT (288 pcs) fired from MLRS ORKAN. Improved submunition was used like rifle grenade warhead in Bosnia (M93 KB-2).

COLOR and MARKING

Body colour:	*Green - olive*
Text colour:	*Black (there are copies of the description of the white)*

FUZE

Type	**Characteristic**,
inertial.	*mechanical, contact,. impact*

SAFETY CONSIDERATION THREAT

Simple removal of submunition is very dangerous. Ejected striker in fuze (13) makes a submunition little resistance to shocks.

NOTICE

The mechanism of the fuze – inertial force. When the submunition impacts by correct angle on hard target, explosion immediately starts.

DRAWINGS/CUTAWAY/MARKING/STENCILING:		LEGEND
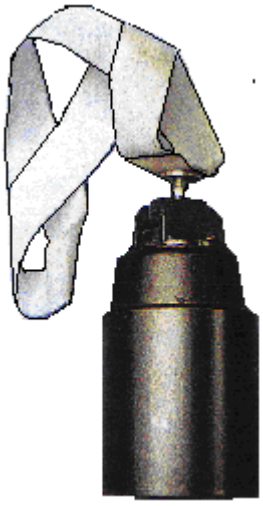 *view submunition KB- 2*	*mine KW-2*	*1 - shaped charge liner; 2 – body of mine, 3 – explosive charge; 4 - detonator, 5 - fuze body; 6 - narrow part of striker; 7 - ribbon (stabilizer belt) 8 - 10- main parts of striker, 11 – 13 transport safety*
	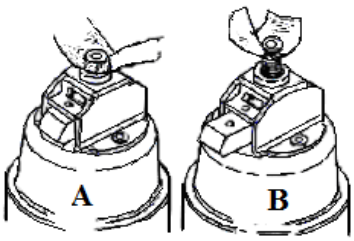 *Fuze. In transport position (A) Armed (advanced fuse-B)*	*submunition M-42 - a comparison*
unexploded submunition KB-2		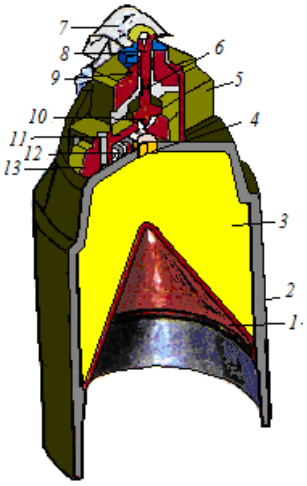 *Cross section of submunition KB-2*

FWP Ammunition

53

AMMUNITION FAMILY SLM / ALM

AMMUNITION TYPE	*Land Mine*
DESIGNATION	*Anti-tank Shaped Charge Mine in a Metal Body - Remotely-Delivered*
NAME/ASSIGNED MARK (original)	**PTM -3**
COUNTRY of ORIGIN	*Former USSR (Russia)*

PTM -3	
total weight of mine with detonators and transport safety device [*kg*]	*4.9*
explosive type	*TGA-40*
weight of explosive [*kg*]	*1.8*
length of body [*mm*]	*330*
width of body[*mm*]	*84*
height of body [*mm*]	*84*
dimension of pressure plate [*mm*]	
activation force greater than [*N*]	*Change of the magnetic field.*
effect of mine	*Penetration up to 40 mm ŘHA plate*
type of fuze	*VT-06*
type of additional (anti-lift) fuze	

PACKING

Number of rounds in the package		**Weight of full package [*kg*]**	

DESCRIPTION

Antitank shaped charge scatterable mine PTM-3 was developed and produced in former USSR nowadays produced in Russia. Mine with expelling charge is in cassette KTPM-3. The cassette with mine is used like submunition in many rockets for MLRS. The container system consist of a VSM-1 with 116 cassettes KPTM-3 and the canister system UMZ has 180 pieces in four K-29 containers. Mine has a magnetic fuze, the antilift system and self-destruction from 3 to 42 hour. The mine has unique four linear charge warhead, which is able to penetrate a tank´s body or destroy the running gear, no matter of the mine orientation.

COLOR and MARKING

Body colour:	Olive green or brown
Text colour:	black

FUZE

Type	**Characteristic,**
VT-06	*Non contact. Electronic, magnetic. With elements of self-destruction*

SAFETY CONSIDERATION THREAT

Mine is very sensitive. Simple removal of mine is very dangerous.

NOTICE

Specifications for the construction fuzes are difficult to access, protected by the manufacturer.

DRAWINGS/CUTAWAY/MARKING/STENCILING:	LEGEND
	1 – body of mine; 2 – central shaped explosive charge, 3 - detonator; 4 - cavity for lithium battery, 5 - mechanism of self-destruction time setting; 6 - marking of the fuze - type, number of manufacturer, month and year of manufacture, 7 – anti-lift mechanism 8 - buttons to set the anti-lift mechanism; 9 - buttons to set the time of self-destruction; 10 - marking of the fuze manufacturer; 11 - marking the type of fuze, 12 - marking the –month of fuze manufacture; 13 - marking the year of fuze manufacture ; 14 - marking the type of mine, 15 - mark control mine.
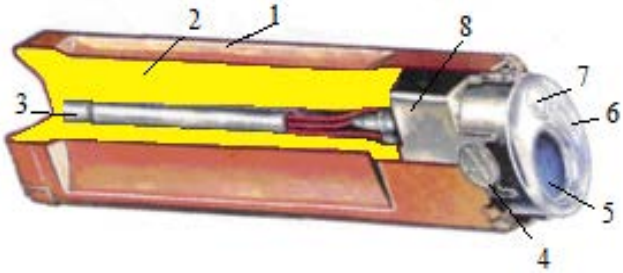	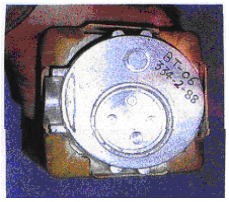 *mine PTM-3 of fuze BT 06 (*
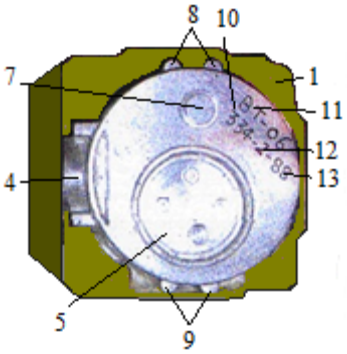 *fuze VT 06*	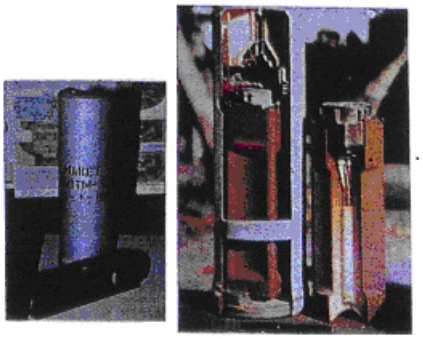 *PTM-3 mine in the cassette KPTM-3*
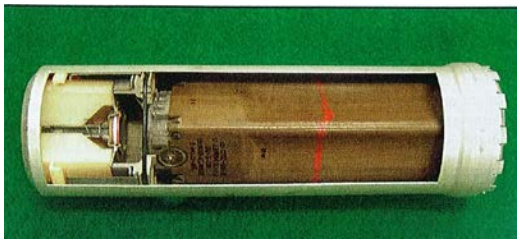 *Wiew of the cassette KPTM-3* 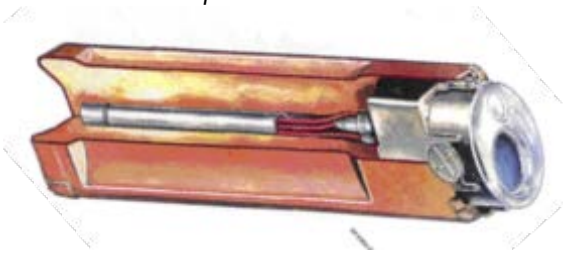 *Profile of the mine PTM-3*	

FWP Ammunition

54

AMMUNITION FAMILY SLM / ALM

AMMUNITION TYPE	*Land Mine*
DESIGNATION	*Anti-tank Blast Mine in a Plastic Body - Remotely Delivered*
NAME/ASSIGNED MARK (original)	**PTM -1S (PGMDM)**
COUNTRY of ORIGIN	*Former USSR*

PTM -1S (PGMDM)	
total weight of mine with detonators and transport safety device [*kg*]	*1.5- 2*
explosive type	*Liquid plastic explosive PVV-12S-1*
weight of explosive [*kg*]	*1.3-1.5*
length of body[*mm*]	*320*
width of body [*mm*]	*75*
height of of body [*mm*]	*75*
dimension of pressure plate [*mm*]	
activation force greater than [*N*]	*1200 - 1600, changing magnetic field.*
effect of mine	*Penetration up to 20 mm RHA plate*
type of fuze	*MVDM; MVDM-G; VGM, VGMS-572*
type of additional (anti-lift) fuze	

PACKING

Number of rounds in the package		**Weight of full package [*kg*]**	

DESCRIPTION

Antitank blast mine PTM-1S (PGMDM) was developed and produced in former USSR. The PTM-1S (formerly called the PGMDM) is a prism shaped. It is the first generation of Soviet scatterable antitank mine, similar to the German AT-1. It can be scattered by multiple rocket launcher, the UMZ mine-scattering system is vehicle mounted, the VSM1 mine scattering system is helicopter mounted, and the PKM is a portable mine scattering system. It is activated by a pressure or by change of the magnetic field. A self-destruct timer that can be set to one of 12 settings, which determine self-destruction from 0 to 24 hours. Mine has plastic (PE) body.
Dangerous. Take special care. Destroy on the place. The production version of mine PTM-1 with additional timing mechanism. Self-destruction after 3-40 hours.

COLOR and MARKING

Body colour:	*Green, olive green, beige or brown*
Text colour:	*black*

FUZE

Type	**Characteristic,**
MVDM (57-V-418)	*Mechanical, pressure, with elements of self-destruction.*
VGM, VGMS-572	*Mechanical ,pressure, magnetic , with elements of self-destruction,*
MVDM-G (57-V-420)	*Mechanical pressure, with elements of self-destruction.*

SAFETY CONSIDERATION THREAT

Mine is very sensitive. Simple removal of mines is very dangerous.

NOTICE

Specifications for the construction fuses are difficult to access, protected by the manufacturer.

DRAWINGS/CUTAWAY/MARKING/STENCILING:	LEGEND
	1-body of mine; marking the control mine and fuze, 3 - fuze MVDM-M; 4 – marking the fuze; ; 5 - marking the fuze -month and year of manufacture; 6 - well for self-destruction devices; 7 - marking the fuze manufacturer; 8 -marking - control mine; 10 - marking the mine manufacturer; 11 - marking the manufacture lot, 12 - marking the year of ´manufacture; 13 - the index of the used fuze
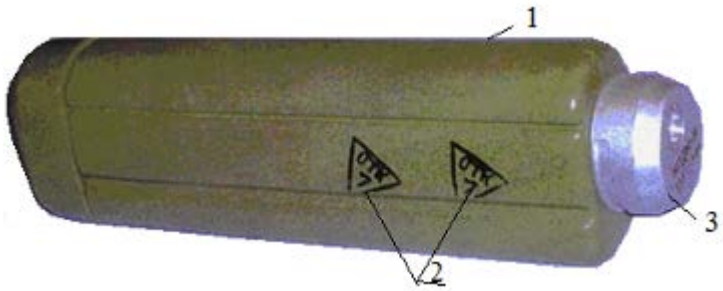	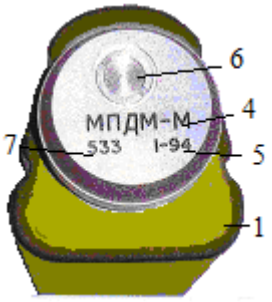 *view of the fuze*
	 *mine **PTM -1S - brass***

mine PTM-1S

mine PTM-1S

mine PTM-1S

FWP Ammunition

55

AMMUNITION FAMILY HEM

AMMUNITION TYPE	*Land Mine*
DESIGNATION	*Anti-Personnel Blast Mine in an Plastic Body*
NAME/ASSIGNED MARK (original)	**MS-3**
COUNTRY of ORIGIN	*former USSR*

MS-3	
total weight of mine with detonators and transport safety device [*kg*]	*0.66*
explosive type	*TNT*
weight of explosive [*kg*]	*0.340*
diameter [*mm*]	*110*
height of body [*mm*]	*65*
dimension of pressure plate [*mm*]	*Diameter 51*
activation force greater than [*N*]	*50*
effect of mine	
type of central fuze	*Integrated with mine with MD -9 detonator*
type of additional (anti-lift) fuze	

PACKING

Number of rounds in the crate		**Weight of full crate [*kg*]**	

DESCRIPTION

Antipersonnel mine MS-3 was developed and produced in former USSR. Mine surprise MS-3 (Мина - сюрприз МС - 3), used as an element of anti-lift device for anti-tank mines and other mines, which have not anti-lift device. Mine MS -3 can also be used as a stand-alone mine – booby trap. Structurally and in terms of the similarity the mine MS- 3 is the same like antipersonnel mines type PMNs. The main difference is, that PMN mine is initiated by the pressure on the mine cover. MS-3 mine is initiated when the pressure on the cover is finished. Mine MS -3 can be placed on the ground only manually. Period of combat using is unlimited, mine operates in the temperature range from -40°C to +50°C. After removing the safety pin mine cannot be deactivated. Detonator MD- 9 is the structural part of the mine construction. Mine was used in Afghanistan.

COLOR and MARKING

Body colour:	*Olive*
Text colour:	*Black*

FUZE

Type	**Characteristic**
Fuze integrated in mine with detonator MD-9	*Mechanical, contact, pressure*

SAFETY CONSIDERATION THREAT

Mine is very sensitive. Simple removal of mines is very dangerous

NOTICE

Mine is to be destroyed on the place.
Construction and principle of operation resembles to PMN mine.

DRAWINGS/CUTAWAY/MARKING/STENCILING:		LEGEND
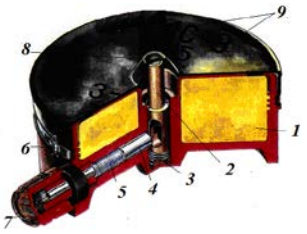 *MS-3 cross-sectional* *mine*	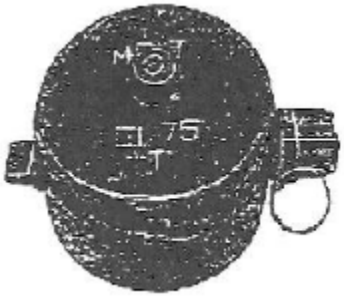	*1 - explosive charge; 2 – safety pin; 3 – safety pin spring; 4 – striker ; 5 – striker spring;; 8- pressure plate (cone); 9 - marking- the name of mine; 10 - cotter pin; 11 - lock nut; 12- cork detonator; 13 - the lower body of the mine; 14 – catcher the hose clamp; 15 - Pressure cone; 16 marking the number of the control body of mine; 17 – marking the sign of the control body mine; 18 - marking the manufacturer of mine; 19 – marking the manufacture lot of mine; 20 – marking the year of manufacture; 21 - marking the final inspection of the mine.*
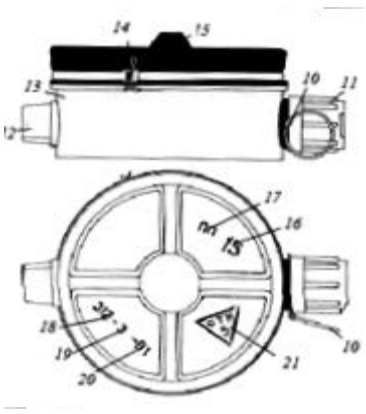	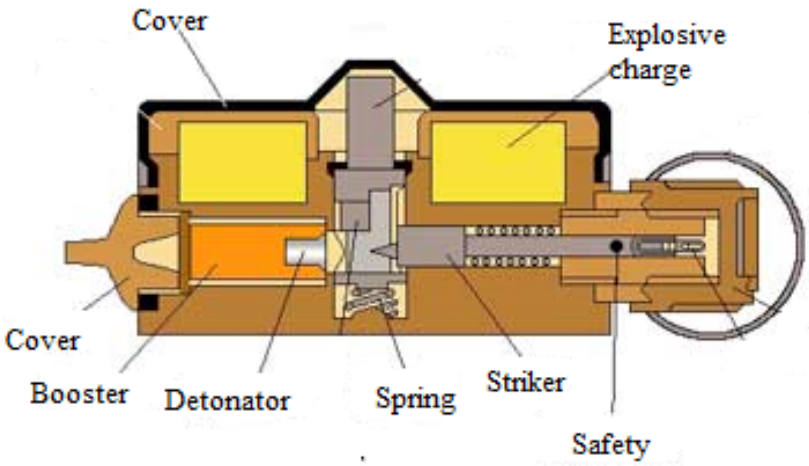	

FWP Ammunition

56

AMMUNITION FAMILY HEM

AMMUNITION TYPE	*Land Mine*
DESIGNATION	*Anti-Personnel Blast Mine in an Plastic Body*
NAME/ASSIGNED MARK (original)	**PMN**
COUNTRY of ORIGIN	*former USSR*

PMN	
total weight of mine with detonators and transport safety device [*kg*]	*0.55*
explosive type	*TNT*
weight of explosive [*kg*]	*0,20*
diameter [*mm*]	*112*
height of body [*mm*]	*56*
maximum height [*mm*]	
dimension of pressure plate [*mm*]	*5*
activation force greater than [*N*]	*50-250*
effect of mine	
type of fuze	*Fuze is combined with a detonator MD-9*
type of additional (anti-lift) fuze	

PACKING

Number of rounds in the package	*25*	**Weight of full package [*kg*]**	*25*

DESCRIPTION

Antipersonnel blast mine PMN was developed and produced in former USSR. Mine is designed to kill or to cause severe injury (mainly the feet) of manpower. It has only a few metal elements, therefore it is difficult to detect by ferromagnetic devices. The PMN is a pressure-operated anti-personnel blast mine with a substantial explosive charge. The main body is made from thick bakelite, with a rubber cap. The cap is held in place by a steel retaining band and the fuze mechanism incorporates a large steel striker and spring. Fuze is combined with a detonator MD-9. Developed version is mine MS-3. Both mines are similar to the China mine type 58 . Used and can be found in Afghanistan.

COLOR and MARKING

Body colour:	*olive green (or khaki); desert sand;*
Text colour:	*Black*

FUZE

Type	**Characteristic**
Mechanical, integrated with detonator MD-9	*Fuze mechanical, contact, pressure.*

SAFETY CONSIDERATION THREAT

Mine is very sensitive. Simple removal of mine is very dangerous

NOTICE

Mine is to be destroyed on the place.

DRAWINGS/CUTAWAY/MARKING/STENCILING:		LEGEND
	Mine PMN - version Practice	*1 - –marking the name of mine; 2 - marking the manufacturer; 3 – marking the anufacture lot ; 4 – marking the manufacture year; 5 – mine body ; 6 - hose clamp, 7 - detonator; 8 – explosive charge; 9 – safety pin spring 10 - safety pin; 11, 13 – striker; 12 striker spring; 16 – safety pin; 17 - fuze transport safety; 18 - transport cap; 19 - detonator; 20 – detonator plug socket ; 21 – rubber cap; 22- the mine body manufacturer mark; 23 lot of the body manufacture; 24 - year of mine body manufacture; 25 - control characters of mine body; 26 - sign of the body mine the final inspection*
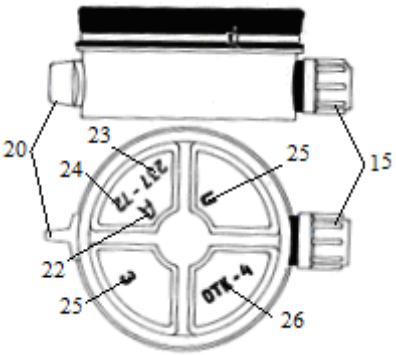 *Description of base mine PMN*	Mine PMN - version practice	mine PMN

FWP Ammunition

57

AMMUNITION FAMILY HEM

AMMUNITION TYPE	*Land Mine*
DESIGNATION	*Anti-Personnel Blast Mine in a Plastic Body*
NAME/ASSIGNED MARK (original)	**PMN-2**
COUNTRY of ORIGIN	*former USSR*

PMN-2	
total weight of mine with detonators and transport safety device [*kg*]	*0.45*
explosive type	*TG-40*
weight of explosive [*kg*]	*0.115*
diameter [*mm*]	*125*
height of body [*mm*]	*55*
maximum height [*mm*]	
dimension of pressure plate [*mm*]	*Diameter 100*
activation force greater than [*N*]	*80-250*
effect of mine	
type of fuze	*integral with the mine*
type of additional (anti-lift) fuze	

PACKING

Number of rounds in the package	*24*	**Weight of full package [*kg*]**	

DESCRIPTION

Anti-personnel blast mine PMN-2 was developed and produced in former USSR. PMN-2 is a pressure activated anti-personnel blast mine, it is the successor of the PMN mine. The main improvement over the PMN is the incorporation of a blast resistant fuze. The plastic casing is a complex moulding, with a screw-on top section, through which the pressure plate protrudes. The integral fuze assembly is also complex, including a pneumatic arming delay and transverse firing mechanism. Access to the booster capsule is from the base of the mine. Once armed, depressing the pressure plate allows the detonator assembly to move into line, and then releases the spring-loaded striker onto it. This mechanism will resist a rapid pressure pulse, making it resistant to most explosive countermeasures.

COLOR and MARKING

Body colour:	*Olive*
Text colour:	*Black*

FUZE

Type	**Characteristic**
Mechanical, integrated	*contact, pressure*

SAFETY CONSIDERATION THREAT

Mine is very sensitive. Simple removal of mine is very dangerous

NOTICE

DRAWINGS/CUTAWAY/MARKING/STENCILING:		LEGEND
	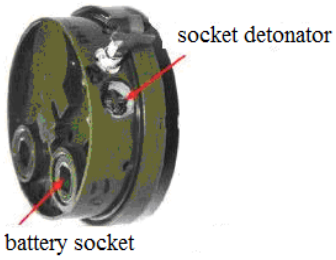	*1 - body of mine; 2 - the top cover; 3 – pressure plate; 4 - the key to arm mine; 5 – marking the name of mine; 6 – marking the manufacturer; 7 – Marking the lot of manufacture; 8 – marking the year of production; 9 - marking the explosive charge; 10 - battery; 11 – fuze well plug; 12 - detonator; 13 - pressure mechanism; 14- the cover plate of the pressure pin; 15 - spring cover; 16 - explosive charge;*
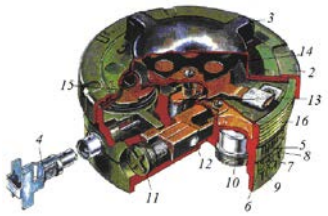		

FWP Ammunition

58

AMMUNITION FAMILY HEM

AMMUNITION TYPE	*Land Mine*
DESIGNATION	*Anti-Personnel Fragmentation Mine in a Metal Body*
NAME/ASSIGNED MARK (original)	**PMP**
COUNTRY of ORIGIN	*former USSR*

PMP	
total weight of mine with detonators and transport safety device [*kg*]	*0.145*
explosive type	*pistol cartridge cal. 7.62*
weight of explosive [*kg*]	
diameter [*mm*]	*36*
height of body [*mm*]	*120*
maximum height [*mm*]	
dimension of pressure plate [*mm*]	*Diameter 28*
activation force greater than [*N*]	*70 - 300*
effect of mine	
type of fuze	*integral,*
type of additional (anti-lift) fuze	

PACKING

Number of rounds in the package		**Weight of full package [*kg*]**	

DESCRIPTION

Antipersonnel fragmentation mine PMP was developed and produced in former USSR. Mine has no detonator. The mine is simply a launch tube with a firing pin in its base. Pressure from the manpower initiates the pistol cartridge cal. 7.62 mm. Projectile from the cartridge pass through the shoe to the foot, causing the destruction of the bones of the foot and big dirty wounds.

COLOR and MARKING

Body colour:	*Olive*
Text colour:	*Black*

FUZE

Type	**Characteristic**
integral	*contact, mechanical, pressure*

SAFETY CONSIDERATION THREAT

Simple removal of mine is very dangerous

NOTICE

Disarming of the mine by removing the cover, along with the barrel and remove the cartridge 7.62 x 25. The inability of the mines after a long stay in changeable weather conditions (weakening of the plastic ebonite components).

DRAWINGS/CUTAWAY/MARKING/STENCILING:	LEGEND
	1 - the lid; 2 - transport lock-safety pin; 3 - abutment flange; 4 - marking the name of the mine; 5 - marking the manufacturer; 6 - marking the manufacture lot; 7 – marking the year of manufacture; 8 – mine body; 9 - breech ; 10 - tube (pistol barrel); 11 - spring; 12 - cartridge cal.7.62 x 25; 13 - firing pin
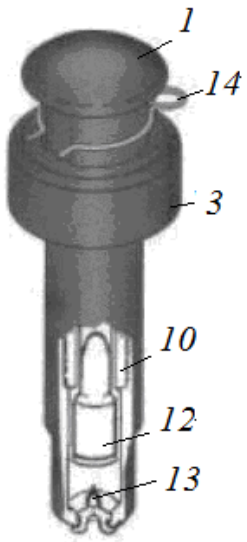	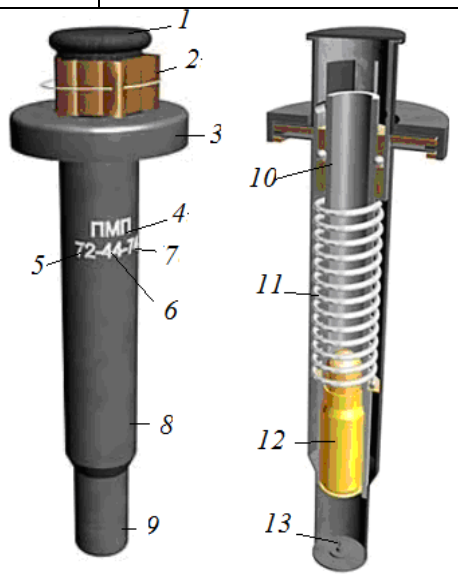

FWP Ammunition

59

AMMUNITION FAMILY HEM

AMMUNITION TYPE	*Land Mine*
DESIGNATION	*Anti-Personnel Fragmentation Mine in a Metal Body – Bounding Mine*
NAME/ASSIGNED MARK (original)	**OZM -3**
COUNTRY of ORIGIN	*former USSR*

OZM -3	
total weight of mine with detonators and transport safety device [*kg*]	*3*
explosive type	*TNT*
weight of explosive [*kg*]	*0.075*
diameter [*mm*]	*76*
height of body [*mm*]	*130*
maximum height [*mm*]	
dimension of pressure plate	
activation force (greater than) [*N*]	*50-200*
effect of mine	*Fragments to 50 m*
type of fuze	*MUV; MUV -2; MUV -3; MUV -4; VPF; MBV-2N/RO -8; RO-1; Mine may be supervised by a mine - mother VP-13*
type of additional (anti-lift) fuze	

PACKING

Number of rounds in the package	*10*	**Weight of full package [*kg*]**	*43*

DESCRIPTION

Antipersonnel fragmentation bounding mine OZM-3 was developed and produced in former USSR. The mine may be initiated either mechanically or electrically. The cylindrical cast iron body has on top side fuze well attachment, normally one for the MUV series. Electric wires also exit through the top. A central plug on the top surface gives access to the delay detonator. Initiation of the fuze or electrical igniter ignites a propellant charge (expelling charge) in the base of the mine, which expels a disc to propel the mine body into the air. A pyrotechnic delay then initiates the detonator and main (explosive) charge to shatter the steel body into fragments. Used by Soviet troops during the conflict in Afghanistan. Exported by the former Soviet Union (Russia) to Arab countries and Asian countries. It is found in Angola, Cambodia, Cuba, Eritrea, Ethiopia, Mozambique, Namibia, Nicaragua, Sudan, Vietnam, Yemen and Zambia.

COLOR and MARKING

Body colour:	*olive green (khaki); desert sand;*
Text colour:	*Black*

FUZE

Type	**Characteristic**
MUV; MUV -2; MUV -3; MUV -4; VPF; MBV-2N/RO -8; RO- 1; MN	*Mechanical, contact, pressure,*
system for inspecting VP-13	*system for inspecting - Electronic system with vibration sensors, infrared, motion, etc.*

SAFETY CONSIDERATION THREAT

Mine is very sensitive. Simple removal of mine is very dangerous

NOTICE

Can be easily confused with antipersonnel mine OZM-72.

DRAWINGS/CUTAWAY/MARKING/STENCILING:		LEGEND
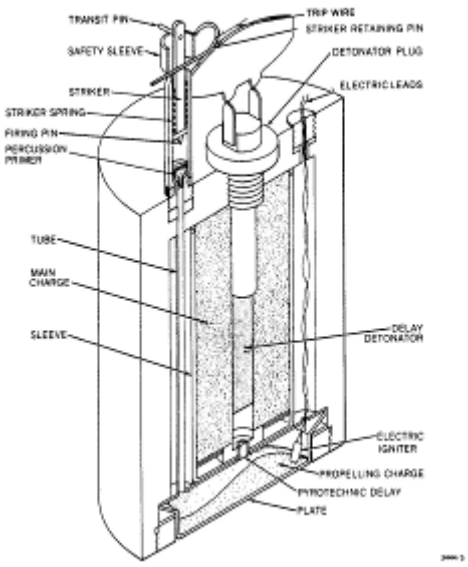	 *Mine OZM-3*	
 Mine OZM - 3 - armed with a fuze MUV.	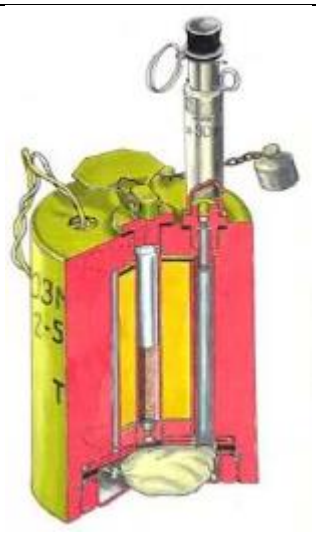	 *Mine OZM - 3 - armed with a fuze MUV.*
 Version of mine OZM-3		

FWP Ammunition

60

AMMUNITION FAMILY HEM

AMMUNITION TYPE	*Land Mine*
DESIGNATION	*Anti-Personnel Fragmentation Mine in a Metal Body – Bounding Mine*
NAME/ASSIGNED MARK (original)	**OZM - 4**
COUNTRY of ORIGIN	*former USSR*

OZM -4

total weight of mine with detonators and transport safety device [*kg*]	*5.4*
explosive type	*TNT*
weight of explosive [*kg*]	*0.170 -0.185*
diameter [*mm*]	*91*
height of body [*mm*]	*17*
maximum height [*mm*]	
dimension of pressure plate [*mm*]	
activation force (greater than) [N]	*50-200*
effect of mine	*Fragmentation up to 15 m*
type of fuze	*MUV; MUV -2; MUV -3; MUV -4; VPF; MBV-2N/RO -8; RO-1; MN and may be supervised by a mine - mother VP-13*
type of additional (anti-lift) fuze	

PACKING

Number of rounds in the package	*6*	**Weight of full package [*kg*]**	*42*

DESCRIPTION

Antipersonnel fragmentation bounding mine OZM-4 was developed and produced in former USSR. Mine OZM-4 is the successor of the OZM-3 mine. Is larger and does not have a secondary electrical fuze well like the mine OZM-3. Detonation is normally ignited by a tripwire fuze, but also simple pressure fuzes could be used too. The detonation is determined by a lanyard attached to a base plate, which remains in the ground (0.6-0.8m). The mine was used by Soviet troops during the conflict in Afghanistan. Exported by the former Soviet Union to Arabic countries and Asian countries. Mine was found in Angola, Cambodia, Cuba, Eritrea, Ethiopia, Mozambique, Namibia, Nicaragua, Sudan, Vietnam, Yemen and Zambia.

COLOR and MARKING

Body colour:	*olive green (khaki); desert sand;*
Text colour:	*Black*

FUZE

Type	**Characteristic**
MUV MUV -2; MUV -3; MUV -4; VPF; MBV-2N/RO -8; RO- 1; MN	*mechanical, contact, pressure*
system for inspecting VP-13	*system for inspecting - Electronic system with vibration sensors, infrared, motion, etc.*

SAFETY CONSIDERATION THREAT

Simple removal of mine is very dangerous

NOTICE

The principle of operation and construction resembles to antipersonnel mine OZM-3. The difference is in the rounded top cover mine.

DRAWINGS/CUTAWAY/MARKING/STENCILING:		LEGEND
mina *Mine OZM-4*	*Mine OZM-4*	*1 – casted iron body of mine; 2 - powder 3 – striker ; 4 – striker spring 5 – powder expelling charge; 6 – base of mine; 7 - release the striker; 8 - fuze MUV-3; 10 – explosive charge; 11 - marking the name of the mine; 12 - marking the manufacturer of mine (further description contains a lot and year of manufacture); 13 – marking the explosive charge, 14- booster.*
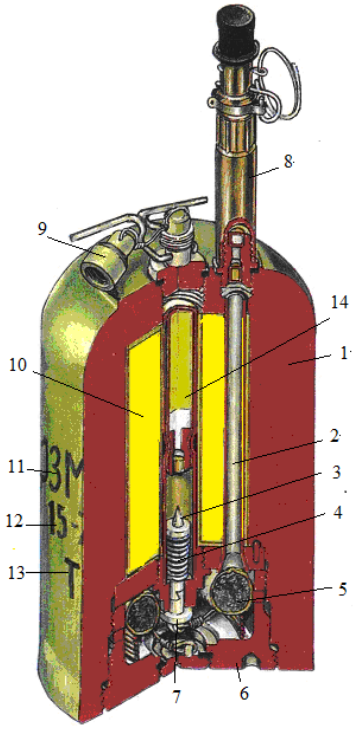		*Mine OZM-4 in battle position*

FWP Ammunition

61

AMMUNITION FAMILY HEM

AMMUNITION TYPE	*Land Mine*
DESIGNATION	***Anti-personnel Fragmentation Mine in a Metal Body – Bounding Mine***
NAME/ASSIGNED MARK (original)	**OZM -72**
COUNTRY of ORIGIN	*former USSR*

OZM -72

total weight of mine with detonators and transport safety device [*kg*]	*5.0*
explosive type	*TNT*
weight of explosive [*kg*]	*0.66*
diameter [*mm*]	*108*
height of body [*mm*]	*150*
maximum height [*mm*]	*172*
dimension of pressure plate [*mm*]	
activation force greater than [*N*]	*50-200*
effect of mine	*Fragmentation up to 50 m*
type of fuze	*MUV; MUV -2; MUV -3; MUV -4; VPF; MBV-2N/, RO -8; RO-1; MN and may be supervised by a mine - mother VP-13*
type of additional (anti-lift) fuze	

PACKING

Number of rounds in the package		**Weight of full package [*kg*]**	

DESCRIPTION

Antipersonnel fragmentation bounding mine OZM -72 was developed and produced in former USSR. Mine OZM-72 is the successor of the OZM-4 mine. OZM-72 has prefragmented sleeve contained in outer body (about 2400 steel cylinders). Detonation is normally ignited by a tripwire fuze, but also simple pressure fuzes could be used too. The detonation is determined by a lanyard attached to a base plate, which remains in the ground (0.6-0.9 m). Used by Soviet troops during the conflict in Afghanistan. Exported by the former Soviet Union to Arabic and Asian countries.

COLOR and MARKING

Body colour:	*olive green (khaki); desert sand;*
Text colour:	*Black*

FUZE

Type	**Characteristic**
MUV; MUV -2; MUV -3; MUV -4; VPF; MBV-2N., RO -8; RO- 1;	*Mechanical, contact, pressure*
Fuze system VP-13	*system for inspecting - Electronic system with vibration sensors, infrared, motion, etc.*

SAFETY CONSIDERATION THREAT

Simple removal of mine is very dangerous

NOTICE

DRAWINGS/CUTAWAY/MARKING/ STENCILING:		LEGEND
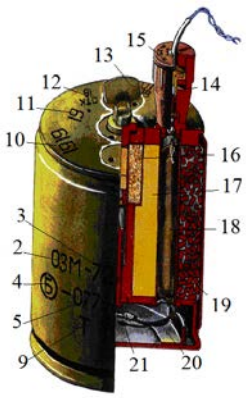	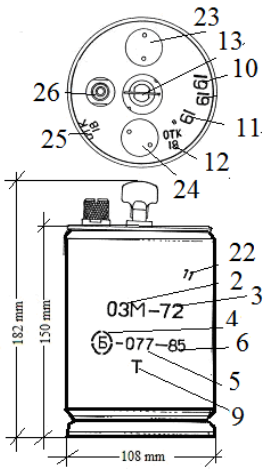	*1-marking the technical inspection body of mine; 2-marking the name of mine; 3 – variety of mine; 4 - marking the manufacturer of mine; 5 - marking the manufacture lot ; 6 – marking the year of manufacture 7 – marking the sign of checks on the input mine; 8 ,9,10- marking the explosive charge; 11-marking the character control key element mine inner body (basic); 12 - marking the sign of the final technical inspection of mine, 13 – fuze,, 14 - electric detonator MN; 15 - index of fuze (type, lot and year of manufacture, 16-booster charge; 17 – explosive charge; 18 – black powder, 19 – fragmentation sleeve; 20 - the base of the mine; 21-expelling charge igniter 22 - marking the control packer mine; 23 - cover assembly; 24 - cover assembly, 25 – marking the sign of the final technical inspection of mine; 26 - fuze well;*

Mine OZM-72 combat position

Operation OZM-72 mine

Mine OZM-72 without fuze

one version of OZM-72 mine marking

View mine after tripping and "output" of container

FWP Ammunition

62

AMMUNITION FAMILY HEM

AMMUNITION TYPE	*Land Mine*
DESIGNATION	*Anti-personnel Fragmentation Mine in a Metal Body – Bounding Mine*
NAME/ASSIGNED MARK (original)	**OZM - 152**
COUNTRY of ORIGIN	*former USSR*

OZM- 152

total weight of mine with detonators and transport safety device [*kg*]	*55.6 with the projectile 152 OF-540*
explosive type	*TNT*
weight of explosive [*kg*]	*6.7 (0.40 booster charge – Tetryl)*
diameter [*mm*]	*152*
height of body [*mm*]	*760*
maximum height [*mm*]	*150*
dimension of pressure plate [*mm*]	*cylindrical*
activation force greater than [N]	
effect of mine	*Fragmentation up to 30 - 40 m*
type of fuze	*Electric fuze PM-1; PM-2; PM-3 (power source battery-BAS-60, BAS-80, battery 12 V).*
type of additional (anti-lift) fuze	

PACKING

Number of rounds in the package	*1*	**Weight of full package [*kg*]**	*62.4*

DESCRIPTION

Antipersonnel fragmentation bounding mine OZM-152 was developed and produced in former USSR. The mine was constructed in 1939, used during World War II and in the Korean conflict. There are more versions of mine OZM 152 depending on type of projectile and initiations systems. Originally they were 152 mm projectiles, placed vertically on the ground or in the pipe launcher, wearing the fuze in the mechanism MV -2, with primer and expelling charge UVK, initiated by wire. After initiation the charge UVK expelled projectile up at a height of about 40 to 60 cm above the surface and followed by the explosion of around 0.3 to 0.45 seconds. Common name for this version of mine is "OZM of the UCMJ". Caliber of used projectiles is ranged from 85 mm to 152 mm (projectiles RP - 45, RP- 61, OF- 462, RP- 540). Fuzes can be used: seismic, optical, infrared, thermal.

COLOR and MARKING

Body colour:	*Olive*
Text colour:	*Black*

FUZE

Type	**Characteristic**
PM-1; PM-2; PM-3	*driven, cable, electric.*
VZ -1	*seismic (vibratory)*
MV-2	*mechanical,*
MEM- 2	*electric fuze*

SAFETY CONSIDERATION THREAT

Simple removal of mine is very dangerous. Destroy on the place.

NOTICE

Removal of the fuze from mine body is difficult, because possibility of using variety of fuzes.

DRAWINGS/CUTAWAY/MARKING/STENCILING:		LEGEND
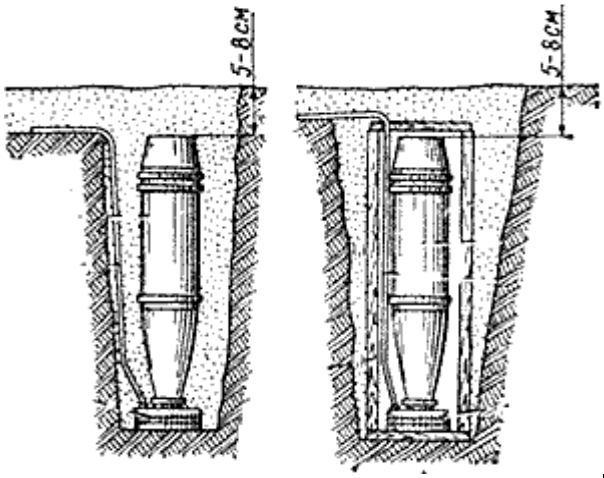 Mine OZM-152 (AUR 152 mod.43.)	 *Mine OZM-152 projectile OF-462*	*1 - the top cover; 2 – body of projectile; 3- base cover; 4 – booster charge; 6 - firing mechanism; 7 – base hook 8 – ignition wire; 10 - expelling charge (black powder); 11 - fuze mechanism MV-2; 12 – explosive charge*
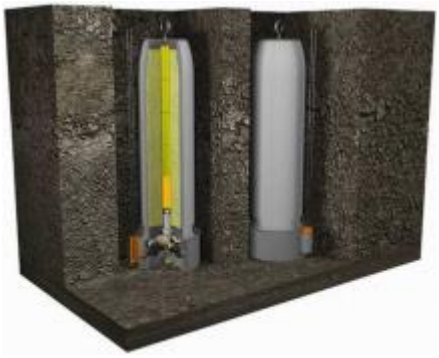 *Mine OZM-152 (O3M-152 mod 1940 in the chamber.*	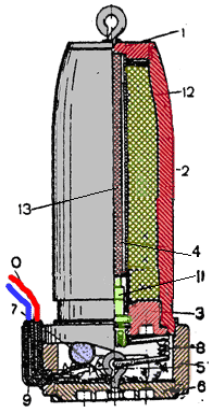 *Section of mines OZM-152*	
 OZM-152 mod. 1940	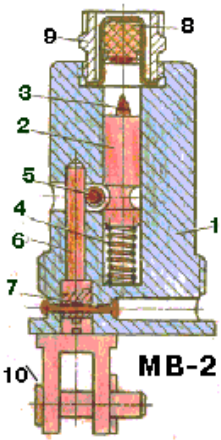 *Firing mechanism load MV-2*	***LEGEND MV-2*** *1 - body; 2,3 – striker; 4 – striking pin spring; 5 - steel ball; 6 - safety pin; 7 - pin; 8 - initiator; 9 - initiator body 10 - hook links*	**UVK** 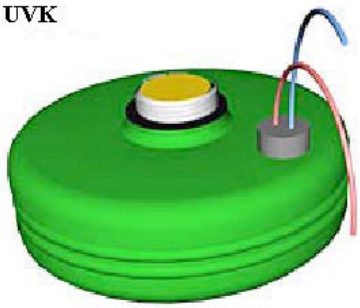 *Expelling charge UVK* *type of mechanism-electric;* *body - steel sheet;* *weight -3 kg;* *diameter - 132 mm;* *height - 75 mm;* *mass of charge (black powder) - 165 gr;* *delay the outbreak – 0.3 -0.45 sec;* *diameter of the pipe (hole launcher) - 135 mm*

FWP Ammunition

63

AMMUNITION FAMILY HEM

AMMUNITION TYPE	*Land Mine*
DESIGNATION	*Anti-personnel Fragmentation Mine in a Metal Body –Bounding Mine*
NAME/ASSIGNED MARK (original)	**OZM-160**
COUNTRY of ORIGIN	*former USSR*

OZM-160

total weight of mine with detonators and transport safety device [*kg*]	*85*
explosive type	*TNT*
weight of explosive [*kg*]	*4.5 depending on the type of used projectile*
diameter [*mm*]	*Max 170*
height of body[*mm*]	*1030*
maximum height [*mm*]	
dimension of pressure plate [*mm*]	
activation force greater than [*N*]	*70 – 300 – tension*
effect of mine	*Fragmentation up to 40-50 m*
type of fuze	*MUV; MUV -2; MUV -3; MUV -4; Electrical and may be supervised by a mine - mother VP-13*
type of additional (anti-lift) fuze	

PACKING

Number of rounds in the package	*1*	**Weight of full package [*kg*]**	*92.4*

DESCRIPTION

Antipersonnel fragmentation mine OZM -160 was developed and produced in former USSR. The mine was constructed late in 1943 and used during World War II and in the Korean conflict. Originally the mine has 152 mm projectile, which is expelled up after expelling charge initiate it from the launcher - barrel (tube) up to the height approximately 1.5 m. Mine is made of a fragmentable grenade located in the pipe-launcher and the expelling initiator, located at the base of the launcher. This type of the mine maintains combat efficiency over a period about 20 years. Used by the Russian army in Afghanistan.

COLOR and MARKING

Body colour:	*Olive*
Text colour:	*Black*

FUZE

Type	**Characteristic**
MUV; MUV -2; MUV -3; MUV -4	*mechanical, contact, pressure*
Fuze system VP-13	system for inspecting - *Electronic system with vibration sensors, infrared, motion, etc.*
electric	*driven, cable, electric.*

SAFETY CONSIDERATION THREAT

Simple removal of mine is very dangerous

NOTICE

Disarming mine is difficult, because it is possible to use variety of detonators. Destroy on the place.

DRAWINGS/CUTAWAY/MARKING/STENCILING:		LEGEND
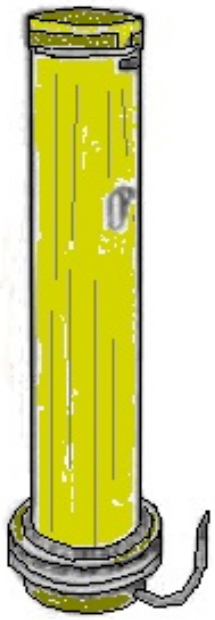	 *Section of mine OZM-160*	*1 – pipe lid; 2 - pipe; 3 - the top of the projectile; 4 - body of projectile ; 5 – explosive charge; 6 - expelling system- mine with a expelling charge; 7 – pipe firing mechanism.*
 View of mine OZM-160	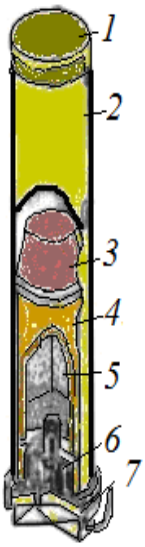	

FWP Ammunition

64

AMMUNITION FAMILY HEM

AMMUNITION TYPE	*Land Mine*
DESIGNATION	***Anti-personnel Fragmentation Mine Directional in a Plastic Body***
NAME/ASSIGNED MARK (original)	**MON -50**
COUNTRY of ORIGIN	*former USSR*

MON -50	
total weight of mine with detonators and transport safety device [*kg*]	*2*
explosive type	*PVV - 5A (plastic explosive)*
weight of explosive [*kg*]	*1.0*
length of body [*mm*]	*22.6*
width of body [*mm*]	*66*
height of body [*mm*]	*156*
dimension of pressure plate [*mm*]	*rectangular*
activation force greater than [*N*]	
effect of mine	*Fragmentation 40 - 50 m*
type of fuze	*MUV; MUV -2; MUV -3; MUV -4; VPF; MBV-2N; RO -8; RO-1; MN and may be supervised by a fuze system VP-13, MVZ-72*
type of additional (anti-lift) fuze	

PACKING

Number of rounds in the package	*6*	**Weight of full package [*kg*]**	*25*

DESCRIPTION

Antipersonnel directional fragmentation mine MON-50 is a copy of the American mine M 18 A 1 Claymore. Mine was produced by the countries of the former Soviet Union. MON-50 has the plastic body encloses rows of imbedded fragments backed by plastic explosive. Two variants are available, one with 540 steel ball bearing fragments, and the other one with 485 cylindrical chopped steel wire fragments. The rectangular mine body is supported by two pairs of folding scissor legs. In the middle of the mine top is a viewfinder and on both sides there are two fuze wells. These fuze wells accommodate a variety of fuzes. Striking in the area of 60 degrees, the effective range up to 50 m.

COLOR and MARKING

Body colour:	*Olive*
Text colour:	*Black*

FUZE

Type	**Characteristic**
MUV; MUV -2; MUV -3; MUV -4	*Mechanical, contact, pressure*
VPF; MBV- 2N; MVZ-72	*Electrical specified time duration of battery life.*
system for inspecting VP-13	*system for inspecting - Electronic system with vibration sensors, infrared, motion, etc.*

SAFETY CONSIDERATION THREAT

Mine is very sensitive. Simple removal of mines is very dangerous

NOTICE

Mine is very effective in the open field. The ability to initiate explosive mine using electric fuze or mines supervises e.g. the supervising VP-13 (seismic vibrations).

DRAWINGS/CUTAWAY/MARKING/STENCILING:		LEGEND
 Section of MON-50 mines	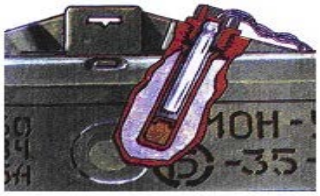 *view on the fuse MON-50 mines*	*1 - marking the manufacturer (versions with the number of manufacturer); 2 marking - the lot of manufacture; 3 – marking the year of manufacture; 4 - marking the name of the mine; 5 - marking the type of mine; 6 - marking the name of the mine; 7 – marking the manufacturer of explosive charge; 8 – marking the lot of explosive charge 9 – marking the year of explosive charge manufacture; 10 - marking the type of explosive charge; 11 - marking a variety of explosive charge; 12 - body of mine; 13 - electric detonator plug; 14 - the viewfinder; 15 - additional well for the fuze; 16 – electric detonator; 17 - fragments (steel balls); 18 - explosive charge.*
 mine MON-50 in combat position	 *mine MON 50*	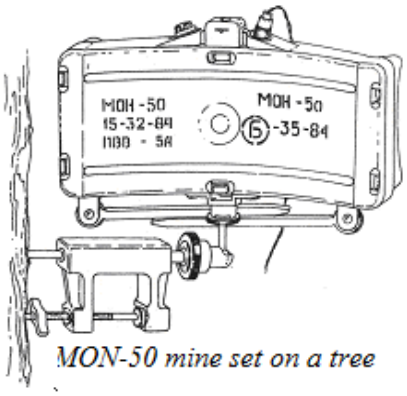 *MON-50 mine set on a tree*
 mine MON 50 placed on a tree	 *mine U-MON 50 (practice) supervising the fuse (practice) U-MVZ-72 (U- MBV- 2N)*	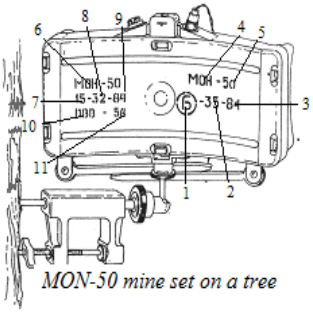 *MON-50 mine set on a tree*

FWP Ammunition

65

AMMUNITION FAMILY HEM

AMMUNITION TYPE	*Land Mine*
DESIGNATION	*Anti-personnel Fragmentation Mine Directional in a Plastic Body*
NAME/ASSIGNED MARK (original)	**MON -90**
COUNTRY of ORIGIN	*former USSR*

MON -90

total weight of mine with detonators and transport safety device [*kg*]	*12.1*
explosive type	*plastic explosive PVV- 5A (RDX 85% Isobutylen 5% mineral oil 10%)*
weight of explosive [*kg*]	*6.2*
length of body [*mm*]	*345*
width of body [*mm*]	*153*
height of body [*mm*]	*202*
dimension of pressure plate [*mm*]	
activation force greater than [N]	
effect of mine	*Fragmentation up to 80- 100 m*
type of central fuze	*MUV; MUV -2; MUV -3; MUV -4; VPF; MBV-2N; RO -8; RO-1; MN and may be supervised by a fuze system VP-13*
type of additional (anti-lift) fuze	

PACKING

Number of rounds in the package	*1*	**Weight of full package [*kg*]**	*25*

DESCRIPTION

Antipersonnel fragmentation mine MON-90 is a directional mine. Mine is the member of the MON directional mine family. The mine was developed and produced in former USSR. Range of the fragments is approximately 100 m. The mine has fuzes screwed into one or both of the fuze wells. When a mechanical fuze is used, the tripwire is run to a suitable securing point and the fuze arming pin (if fitted) is removed. Having two fuze wells allows concurrent electrical and mechanical fuze. During either electrical or mechanical operation, the detonator initiates the explosive charge, projecting the fragments in a horizontal fan-shaped pattern. The fragments spread in an arc to cover a frontage of approximately 60 m at the maximum effective range of 90 m. This mine is substantially more powerful than most `Claymores', is effective against soft-skinned vehicles and as well as personnel. Used during the Balkan conflicts. Also encountered in Afghanistan. Interestingly dangerous area is also on the back of mine within a radius of 15 m, laterally beyond the zone of debris is up to 8 m.

COLOR and MARKING

Body colour:	*Olive*
Text colour:	*Black*

FUZE

Type	**Characteristic**
MUV; MUV -2; MUV -3; MUV -4	*mechanical, contact, pressure*
VPF; MBV- 2N;	*Electrical specified time duration of battery life.*
Fuze system VP-13	*system for inspecting - Electronic system with vibration sensors, infrared, motion, etc.*

SAFETY CONSIDERATION THREAT

Mine is very sensitive. Simple removal of mine is very dangerous

NOTICE

Mine is very effective in the open field. The ability to initiate the mine using electric fuze or fuze systems supervising VP-13 (seismic, vibrations).

DRAWINGS/CUTAWAY/MARKING/STENCILING:		LEGEND
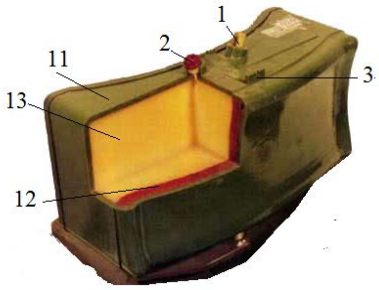 *Section of MON-90 mine*	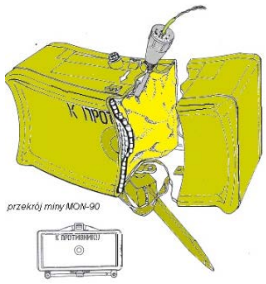 *drawing mine MON-90-sectional*	*1 – fuze well; 3 - the viewfinder; 4 - handle; 6 – marking the name of the mine; 7 marking the type of mne; 8 marking the mine manufacturer (versions with a number of mine manufacturer); 9 -marking lot of manufacture; 10 – marking the year of manufacture; 11 - body of mine; 12 - rear wall of the mine; 13 - explosive charge;*
 view mine -MON-90 from the front and from above - drawing	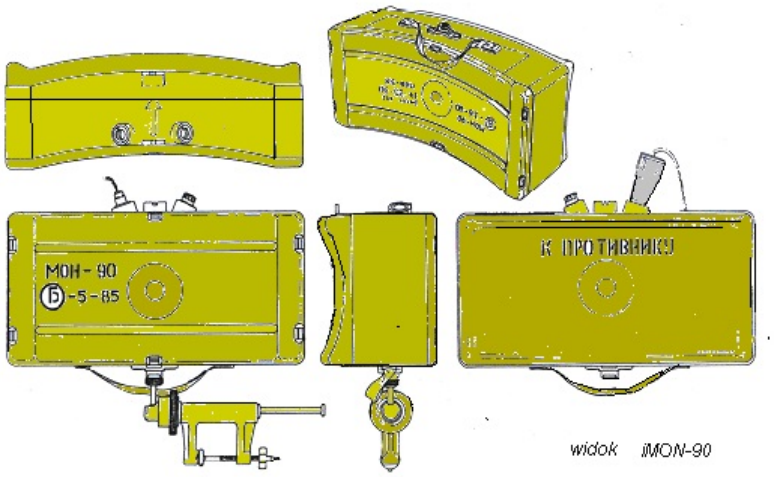 *view MON-90 mine in different positions*	
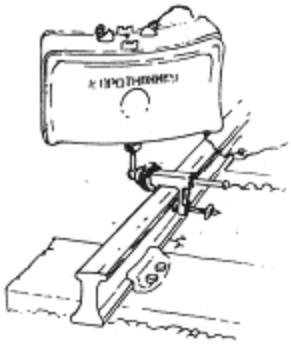 *Mine MON-90 set on the tracks*	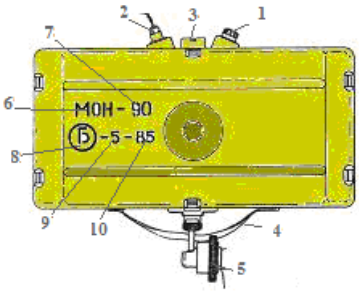	 *Photo mine MON-90*

FWP Ammunition

66

AMMUNITION FAMILY HEM

AMMUNITION TYPE	*Land Mine*
DESIGNATION	**Anti-personnel Fragmentation Mine in a Metal Body-Directional**
NAME/ASSIGNED MARK (original)	**MON -100**
COUNTRY of ORIGIN	*former USSR*

MON -100	
total weight of mine with detonators and transport safety device [*kg*]	*5.0*
explosive type	*plastic explosive PVV- 5A (RDX 85% Isobutylen 5% mineral oil. 10%)/pressed TNT*
weight of explosive [*kg*]	*2.0*
diameter [*mm*]	*238*
height of body [*mm*]	*82*
maximum height [*mm*]	
activation force greater than [N]	
effect of mine	*Fragmentation up to 100 m*
type of fuze	*Electric EDPr; all types of MUV series and may be supervised by a fuze system VP-13*
type of additional (anti-lift) fuze	

PACKING

Number of rounds in the package	*5*	**Weight of full package [*kg*]**	*45*

DESCRIPTION

Antipersonnel fragmentation directional mine MON-100 was taken into service in the former USSR Army in the 60th. It consists of a body filled with explosive material and steel fragments (400 rolls placed in epoxy resin). Fragments are in the front of explosive. Activation occurs depending on the fuze type (by tension, electrical jumper or remote firing). The effective range of fragments for the manpower is up to 100 m. During the detonation about 50 % of fragments are concentrated in the area of 5 m in front of the mine, the rest is scattered in a radius of 15 m. The mine can be placed on the ground, hang up on a tree or on its own metal stake. It is effective not only against the manpower but also against lightly armoured vehicles. Mine is in service of many countries. Production: former USSR (Russia); Poland. Used during the Balkan conflicts. It is found also in Afghanistan.

COLOR and MARKING

Body colour:	*Olive*
Text colour:	*Black*

FUZE

Type	**Characteristic**
MUV; MUV -2; MUV -3; MUV -4	*Mechanical, contact, pressure*
EDPr;	*Electrical specified time duration of battery life. EDPr-initiation*
Fuze system for inspecting VP-13	system for inspecting - *Electronic system with vibration sensors, infrared, motion, etc.*

SAFETY CONSIDERATION THREAT

Mine is very sensitive. Simple removal of mine is very dangerous

NOTICE

Very effective in open or lightly covered areas with grass. The ability to initiate the mine is using electric fuze or fuze system for the supervising VP-13 (seismic vibrations).

DRAWINGS/CUTAWAY/MARKING/STENCILING:		LEGEND
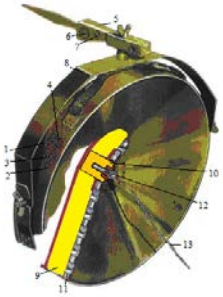	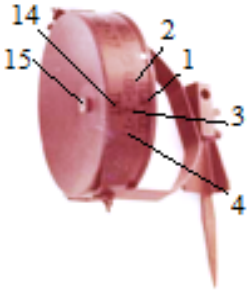 *mine MON -100 version Poland*	*1 - marking the type of mine; 2 - marking the manufacturer of mine; 3 - marking the lot of manufacture, 4 - marking the year of mine manufacture ; 5 - steel stake; 8 - handle ; 9 - explosive charge; 10 – booster charge; 11 - Fragments (balls of steel or steel wire); 12 - electric detonator EDPr; 13 - electric conductors; 14 - marking the type of booster charge; 15 – fuze well.*
	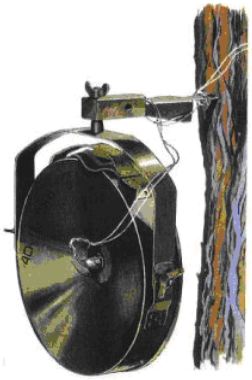 *mine MON-100 with* fuze *EDPr*	 *mine MON-100 with* fuze *MN*
 mine MON-100 –practice *mine MON -100 version Poland*	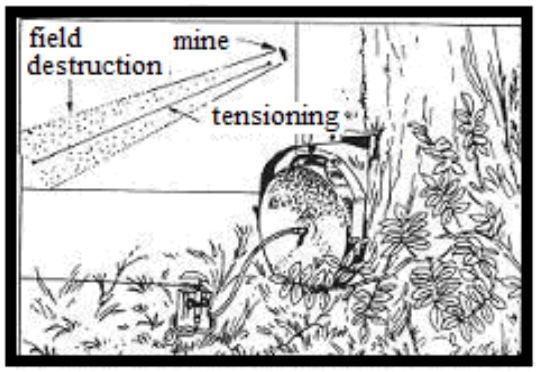 setting mine MON-100 with fuse winding (fire)	

FWP Ammunition

67

AMMUNITION FAMILY HEM

AMMUNITION TYPE	*Land Mine*
DESIGNATION	***Anti-personnel Fragmentation Mine Directional in a Metal Body***
NAME/ASSIGNED MARK (original)	**MON-200**
COUNTRY of ORIGIN	*former USSR*

MON -200	
total weight of mine with detonators and transport safety device [*kg*]	*25*
explosive type	*Plastic explosive PVV- 5A (RDX 85% Isobutylen 5% mineral oil. 10%) /*TNT
weight of explosive [*kg*]	*12*
diameter [*mm*]	*434*
height of body [*mm*]	*130*
dimension of pressure plate [*mm*]	
activation force greater than [*N*]	
effect of mine	*Fragmentation up to 200 m*
type of fuze	*Electric detonator EDPr; all types of MUV series. and may be supervised by a fuze system VP-13*
dimension of pressure plate [*mm*]	

PACKING

Number of rounds in the package	*1*	**Weight of full package [*kg*]**	*38*

DESCRIPTION

Antipersonnel fragmentation directional mine MON-200 was taken into service in the former USSR Army in the 60th. It consists of a body filled with explosive and steel fragments (900 steel balls embedded in epoxy resin). Fragments are in front part of explosive. Activation depending on the fuze type (by tension, electrical jumper or remote firing). The effective range of fragments for the manpower is up to 200 m. During the detonation about 50 % of fragments are concentrated in the area of 5 m in front of the mine, the rest is scattered in a radius of 15 m. Mine is placed on the ground, hang up on a tree, poles, etc. It is effective not only against the manpower but also against lightly armoured vehicles.
Productions: former USSR (Russia); Used during the Balkan conflicts. Encountered in Afghanistan.

COLOR and MARKING

Body colour:	*Olive*
Text colour:	*Black*

FUZE

Type	**Characteristic**
MUV; MUV -2; MUV -3; MUV -4	*Mechanical, contact, pressure*
EDPr;	*Electrical specified time duration of battery life. EDPr-driven*
Fuze system for inspecting VP-13	*system for inspecting - Electronic system with vibration sensors, infrared, motion, etc.*

SAFETY CONSIDERATION THREAT

Mine is very sensitive. Simple removal of mine is very dangerous

NOTICE

Very effective in open or lightly covered areas with grass. The ability to initiate the mine using electric detonator or fuze system for the supervising VP-13 (seismic vibrations).

DRAWINGS/CUTAWAY/MARKING/STENCILING:		LEGEND
	 View mine MON-200 (from the side of the shaped charge)	*1 - shaped charge liner ; 2 - handle ; 4 - steel stake; 5 - marking the type of mine; 6 - marking the mine manufacturer; 7 – marking the lot of manufacture 8 – marking the year of manufacture; 9 - upper side of mine;*
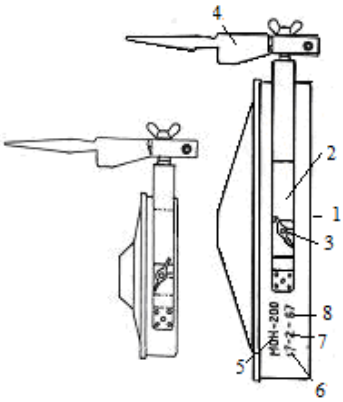 *Drawing comparative mine MON-100 and MON-200 mine*	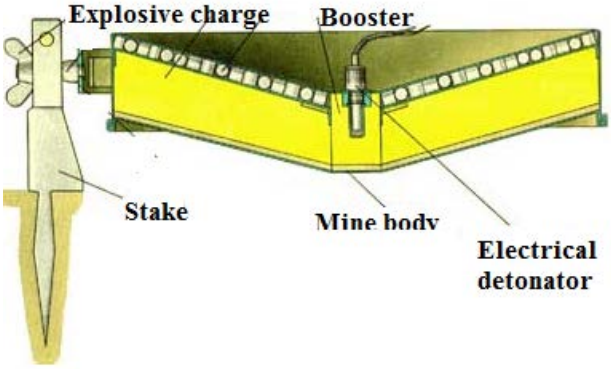	
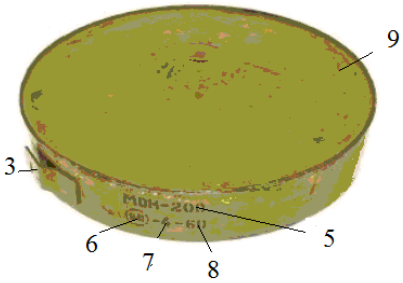 *marking on the mine MON -200*	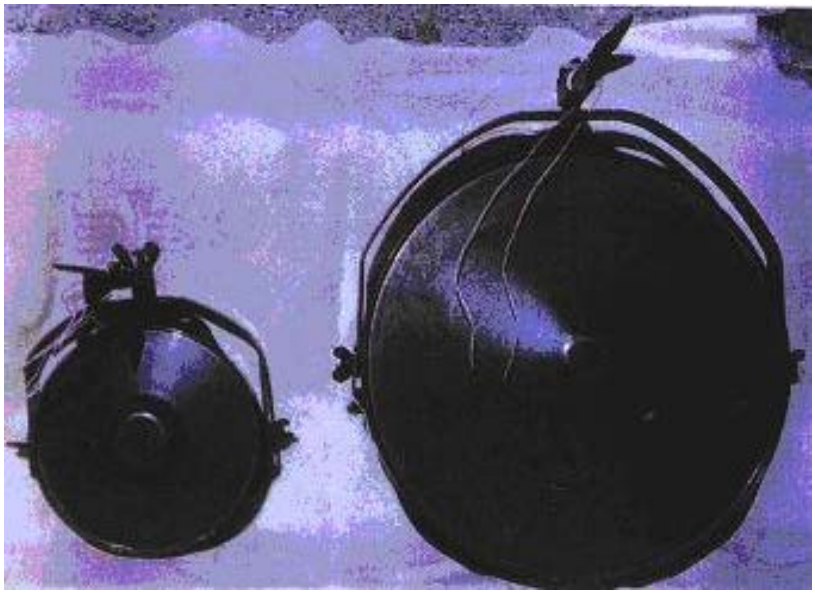 *The mines MON-100 and MON-200*	

FWP Ammunition

68

AMMUNITION FAMILY HEM

AMMUNITION TYPE	*Land Mine*
DESIGNATION	***Anti-personnel Blast Mine in a Wooden Body,***
NAME/ASSIGNED MARK (original)	**PMD-6M (PMD-6)**
COUNTRY of ORIGIN	*former USSR*

PMD-6M (PMD-6)	
total weight of mine with detonators and transport safety device [*kg*]	*0.58*
explosive type	*200 – cube TNT*
weight of explosive [*kg*]	*0.200*
length of body [mm]	*202*
Width of body [mm]	*96*
height of body [mm]	*38*
dimension of pressure plate [*mm*]	
activation force greater than [*N*]	*20-150*
effect of mine	*Blast wave*
type of fuze	*MUV (detonator MD-2)*
type of additional (anti-lift) fuze	

PACKING

Number of rounds in the package	*100*	**Weight of full package [*kg*]**	*40*

DESCRIPTION

Antipersonnel blast mine in a wooden body PMD – 6M (PMD-6) was developed and produced in former USSR. The mine consists of an explosive charge housed in a wooden box with a hinged lid. A simple MUV-type pull fuze is inserted through a hole at the end of the box. The fuze is fitted with a winged retaining pin. When sufficient pressure is applied to the lid, it forces the winged retaining pin out of the spring-loaded striker, releasing it onto the stab-sensitive detonator assembly. PMD-6M is slightly larger and incorporates a small leaf spring in the lid to increase the operating pressure. Mine PMD-6M and its versions were used in many countries, also used in the Korean and Balkan conflicts.

COLOR and MARKING

Body colour:	*Olive*
Text colour:	*Black*

FUZE

Type	**Characteristic**
MUV;	*Mechanical, contact, tension-pressure*

SAFETY CONSIDERATION THREAT

Mine is very sensitive. Simple removal of mine is very dangerous

NOTICE

Danger due to the very small resistance force on the lid of the chamber (about 1 to 2 kg.)

DRAWINGS/CUTAWAY/MARKING/STENCILING:	LEGEND
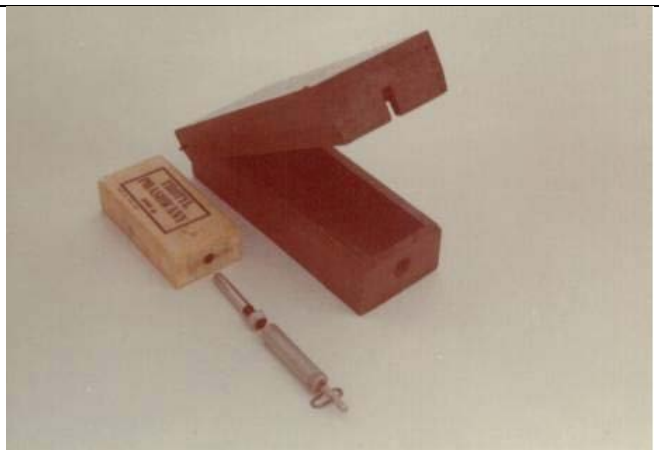 *Mine PMD-6M (Poland production)*	*1 – base part of mine; 2 - upper part of mine body; 3 - axis of rotation (nail); 4 - MUV -fuze mechanism;* *5 - winged retaining pin*
  cube of 200 gr. TNT (Poland production)	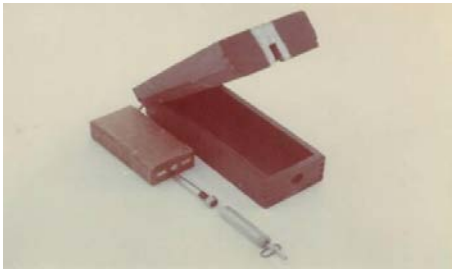 *practice mine PMD-6*
  Mine PMD-6 Russian version	 *Fuze MUV*
Mine PMD-6 	

FWP Ammunition

69

AMMUNITION FAMILY HEM

AMMUNITION TYPE	*Land Mine*
DESIGNATION	***Anti-personnel Fragmentation Stake Mine in a Metal Body***
NAME/ASSIGNED MARK (original)	**POMZ-2 (POMZ-2M)**
COUNTRY of ORIGIN	*former USSR*

POMZ-2 (POMZ-2M)

total weight of mine with detonators and transport safety device [*kg*]	*2.3 - POMZ-2 / 1.8 - POMZ-2M*
explosive type	*TNT*
weight of explosive [*kg*]	*0.075*
diameter [*mm*]	*60*
height of body [*mm*]	*130 – POMZ-2 / 107- POMZ-2M*
maximum height [*mm*]	
dimension of pressure plate [*mm*]	
activation force greater than [N]	*20 -50*
effect of mine	*Fragments 25-30 m*
type of fuze	*From the series MUV with a cotter pin "p"*
type of additional (anti-lift) fuze	

PACKING

Number of rounds in the package		**Weight of full package [*kg*]**	

DESCRIPTION

Antipersonnel fragmentation stake mine POMZ-2 (POMZ-2M) was developed and produced in former USSR. The mine POMZ-2 consists of a heavily grooved (6 rows of grooves) cylindrical cast-iron body, a 75-gram TNT charge, a MUV type tripwire fuze and a wooden stake. This mine is usually tripwire initiated using an MUV-series pull fuze. Pull on the tripwire extracts the striker retaining pin, releasing the spring-loaded striker onto the stab-sensitive detonator assembly. Multiple tripwires may be used. The POMZ-2 was replaced by the POMZ-2M, which has 5 rows of grooves and a threaded fuze well. Copies of this mine have been produced by numerous countries including China, former East Germany or North Korea.

COLOR and MARKING

Body colour:	*Olive*
Text colour:	--------

FUZE

Type	**Characteristic**
MUV;	*mechanical, contact, pressure-tension*

SAFETY CONSIDERATION THREAT

Simple removal of mine is very dangerous

NOTICE

Used during World War II, the Korean conflict, the Golan Heights or the Balkan conflict. Used in many armies in the world, starting with the countries of Central and Eastern Europe, the Asian countries of the Middle East, African and South America.

DRAWINGS/CUTAWAY/MARKING/STENCILING:		LEGEND
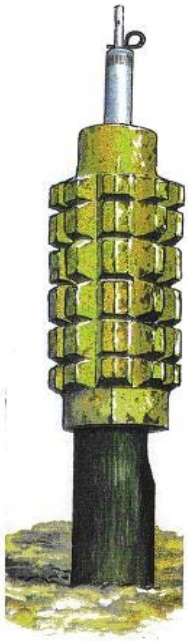 *mine POMZ-2 in combat position*	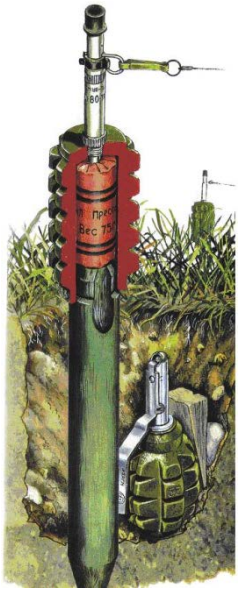 *mine POMZ-2M with an additional element of destruction (mine - a trap)*	*1 - body of mine; 2 - charge TNT-75 gr. 3 - detonator MD-5M; 4 - MUV fuze mechanism with striker retaining pin; 5 - wooden stake; 6 - wire; 7 - wooden stake; 8 - safety pin.* *detonator MD-5M*
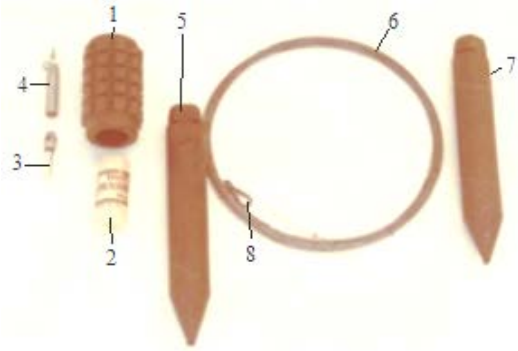 *set to set mine POMZ-2M (Polish version)*		
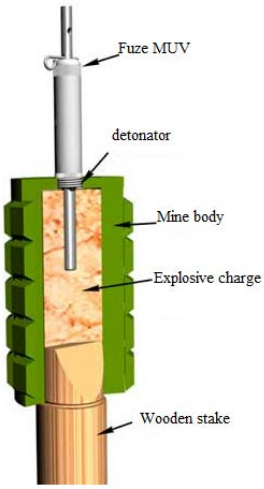		*View mine POMZ-2M*

FWP Ammunition

70

AMMUNITION FAMILY ALM

AMMUNITION TYPE	*Submunition*
DESIGNATION	*Incendiary Submunition in a Metal Body*
NAME/ASSIGNED MARK (original)	**ZAB-2,5**
COUNTRY of ORIGIN	*former USSR*

ZAB-2,5

total weight of submunition with detonators and transport safety device [*kg*]	*2.2 to 2.5*
explosive type	*incendiary composition - thermite*
weight of incendiary composition [*kg*]	*1.7*
diameter [*mm*]	*68*
height of body [*mm*]	*245*
maximum height [*mm*]	
shape	*cylindrical*
activation force greater than [*N*	
effect of submunition	*penetration 3 mm RHA*
type of fuze	*Integrated with the submunition . There are three variants with delaying from 2.5 to 6 minutes*
type of additional (anti-lift) fuze	

PACKING

Number of rounds in the crate		**Weight of full crate [*kg*]**	

DESCRIPTION

Incendiary submunition ZAB-2,5 was developed and produced in former USSR. The submunition is packed in a container - 250 kg cluster bomb RBK-250. RBK-250 ZAB 2,5 contains 48 submunition total, three different variants, usually with 16 ZAB-2.5 var.1 submunition, 16 ZAB-2.5 var.2 submunition, and 16 ZAB-2.5 var.3 submunition.
Variant 1 – weight: 2.3kg; incendiary composition thermite; approx. burn time: 150 – 180 seconds. Variant 2 – weight: 2.5kg; incendiary composition thermite +14 g high explosive; approx. burn time: 120 – 180 seconds.
Variant 3 – weight: 2.2kg; incendiary composition thermite +14 g high explosive + jellied fuel mixture; approx. burn time: 3-9 mins.
The ZAB-2.5 submunition are ignited upon expelling rom the cluster bomb RBK-250 ZAB-2.5 and fall down burning.

COLOR and MARKING

Body colour:	*olive green or gray (blue);*
Text colour:	*Black*

FUZE

Type	**Characteristic**
	Integrated with the submunition. It comes in three variants with a delay of 2.5 to 6 minutes;

SAFETY CONSIDERATION THREAT

Simple removal of submunition is dangerous

NOTICE

Used submunition is dangerous. Do not lift, roll or slide. Over time, the body decomposes and becomes particularly dangerous (responds to the slightest pressure).

DRAWINGS/CUTAWAY/MARKING/STENCILING:	LEGEND
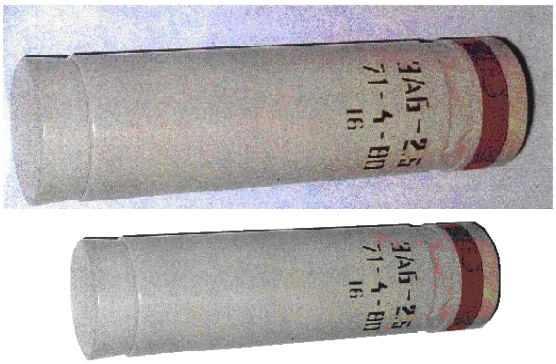	*1 – body of submunition ; 2 - marking - a lot of manufacture; 3 –fuze; 4 – marking – the name of submunition ; 5 - marking - submunition caliber ; 6 - marking- the manufacturer; 7 – marking –the month of manufacture; 8 - marking - the year of manufacture.*

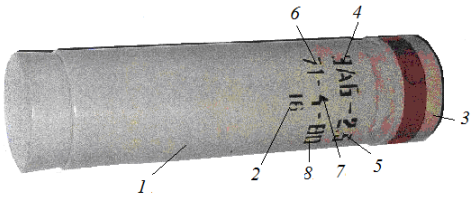

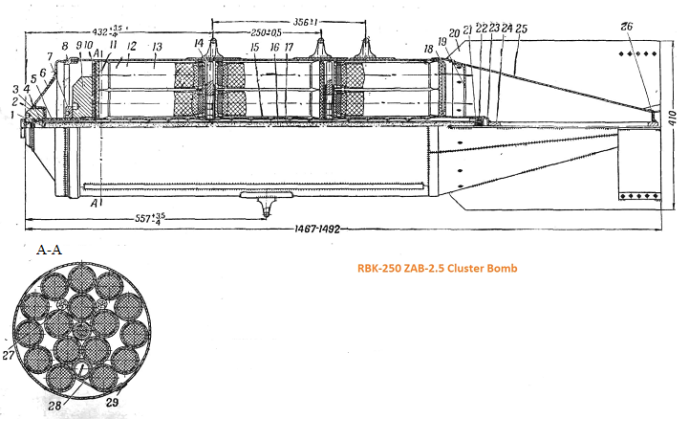

250 kg cluster bomb RBK-250 ZAB-2,5

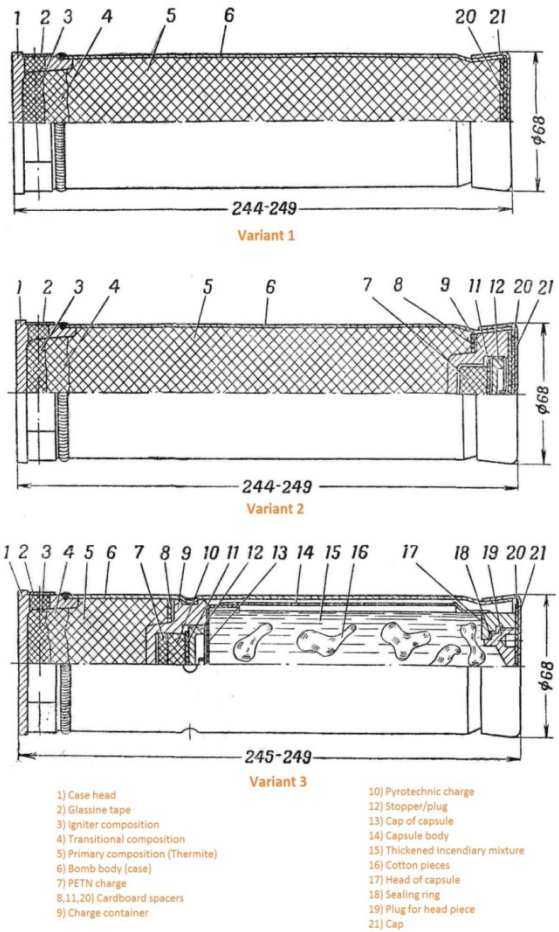

FWP Ammunition

71

AMMUNITION FAMILY SLM / ALM

AMMUNITION TYPE	*Land Mine*
DESIGNATION	*Antipersonnel Blast Mine in a Plastic Body,– Scatterable*
NAME/ASSIGNED MARK (original)	**PFM -1 (PFM-1S)**
COUNTRY of ORIGIN	*former USSR*

PFM -1 (PFM-1S)	
total weight of mine with detonators and transport safety device [*kg*]	*0.075*
explosive type	*VS-6D (Nitroparaffin /RDX -40 / 60 - liquid plastic explosive)*
weight of explosive [*kg*]	*0.035- 0.040;*
length of body [*mm*]	*120*
width of body [*mm*]	*61*
height of body [*mm*]	*19*
dimension of pressure plate [*mm*]	
activation force greater than [N]	*20-50*
effect of mine	
type of fuze	*Integrated with mine. Type MVDM (VGM-572).*
type of additional (anti-lift) fuze	

PACKING

Number of rounds in the package		**Weight of full package [*kg*]**	

DESCRIPTION

Antipersonnel blast mine PFM-1 was developed and produced in former USSR. A self-destruct variant of this mine (PFM-1S), is intended to randomly self-destruct over a period of time. While the nominal period for 85% self-destruct is 40 hours, the mines remain functional for longer time. PFM-1S mines are known to randomly self-destruct for weeks after layout. The confirmation that the former Soviet Armed Forces had within their inventory an antipersonnel scatter mine system came shortly after their invasion to Afghanistan. The mine consists of a pressure-fuzed liquid explosive in a green or sand-brown plastic case. The mine was used extensively to interdict trails and resupply routes within Afghanistan. The PFM-1 mine is a reverse-engineered copy of the US BLU-43 mine used in Southeast Asia and is extremely effective. (The body of the both mines is made of low density polyethylene, containing a liquid explosive).

COLOR and MARKING

Body colour:	*olive green, desert sand, brown, blue, red, black, white.*
Text colour:	*Black (white)*

FUZE

Type	**Characteristic**
MVDM/VGM-572.	*Integrated of mine*

SAFETY CONSIDERATION THREAT

Mine is very sensitive. Simple removal of mine is very dangerous. Destroy on place. Do not touch, roll or move.

NOTICE

Both types of mines cannot be disarmed after their placing. Mine FPM -1 can be combined in larger charges for using the compile switches VGM – 572.

DRAWINGS/CUTAWAY/MARKING/STENCILING:		LEGEND
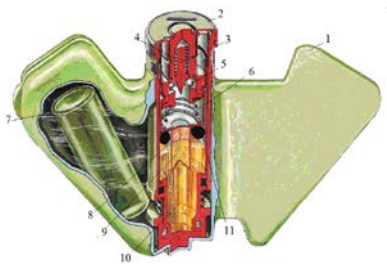		*1 - wing; 2 - transport cap; 3 - striker; 4-striker spring; 5 - steel balls; 6 - spring; 7 - a container with liquid explosive; 8 - detonator; 9 – booster charge; 10 - jack on the mechanism of selfdestruction (on the mechanism of pneumatic fuze in the mine PFM-1S); 11 - rubber ring; 12 -marking the name of the mine; 13 - marking the manufacturer; 14 - marking the manufacture lot 15 - marking the year of manufacture; 16 - marking the explosive component (nitroparaffina CH); 17 - marking the component of the explosive (RDX or H-hexogen); 18 - marking the explosive weight;*
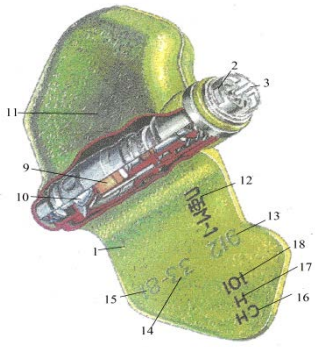	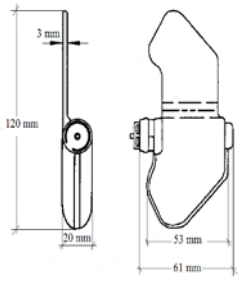	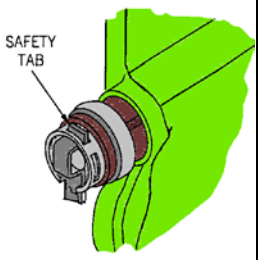	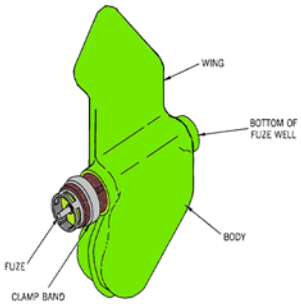
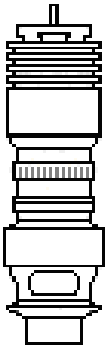 *Fuse MVDM/VGM.*	*Mine **PFM -1 (PFM-1S)***	

FWP Ammunition

72

AMMUNITION FAMILY ALM / SLM

AMMUNITION TYPE	*Land Mine*
DESIGNATION	*Antipersonnel Fragmentation Mine in a Metal Body- Scatterable*
NAME/ASSIGNED MARK (original)	**POM -1 S**
COUNTRY of ORIGIN	*former USSR*

POM -1 S	
total weight of mine with detonators and transport safety device [*kg*]	*0.750*
explosive type	*TG - 40*
weight of explosive [*kg*]	*0.100*
diameter [*mm*]	*80*
length of the tripwires (8 pcs) (m)	*to 6*
effect of mine	*Fragmentation up to 10 m*
diameter disc pressure [*mm*]	
activation force greater than [*N*]	*10 - 50*
type of fuze	*RGO/RGN*
type of additional (anti-lift) fuze	

PACKING

Number of rounds in the package		**Weight of full package [*kg*]**	

DESCRIPTION

The antipersonnel fragmentation mine POM -1 S was developed and produced in former USSR. The mine is a faithful copy of the American, antipersonnel mine BLU-42B. The mine cannot be placed manually, only using special systems (e.g. a helicopter´s container VSM - 928 mines). Fuze type of RGO / RGN is located in the central part of the mine. The fuze is electromechanical with a tilt actuating mechanism (ball switches), electromechanical remote arming (after expelling from cluster) and selfdestruction mechanisms. The effective range of fragments to vulnerate the manpower is up to 10 m. A mine lying on the surface is sensitive for movement. Small movement of the mine (15 – 20 °) caused initiation of the mine.

COLOR and MARKING

Body colour:	*Olive*
Text colour:	*Black*

FUZE

Type	**Characteristic**
RGO/RGN	*electrical, non contact,*

SAFETY CONSIDERATION THREAT

Mine is very sensitive. Simple removal of mine is very dangerous

NOTICE

Mine is very dangerous. Destroyed on the place, do not touch, roll or move.

DRAWINGS/CUTAWAY/MARKING/STENCILING:		LEGEND
Mine POM-1S		*1 - body of mine; 2 - steel ball in fuze; 3 - flat springs; 4 - plug socket fuze mechanism; 5 - tripwire; 6 - vibration sensor ;; 8 – explosive charge; 9 - detonator.* ***<u>Legend container</u>*** *10 - mine POM-1S; 11 - marking the container name; 12 - marking of manufacturer; 13 – marking the lot of manufacture14 – marking the year of container manufacture; 15 - the type of explosive; 18 - lot; 19 - year of loading the container;*
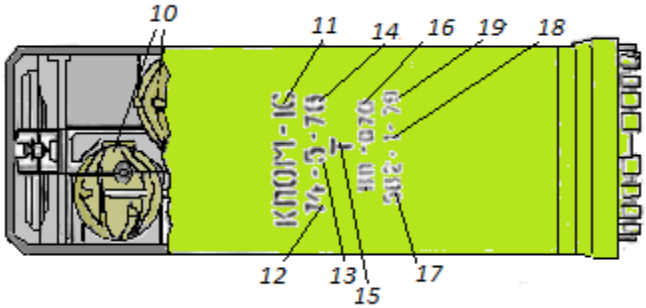 *Container KPOM-1S containing 8 pcs mine POM-1S*		UZM set on the transporter MTLBu 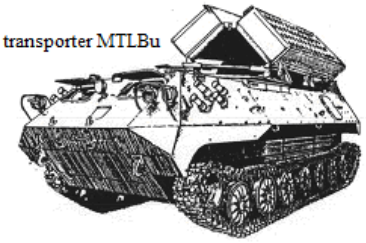
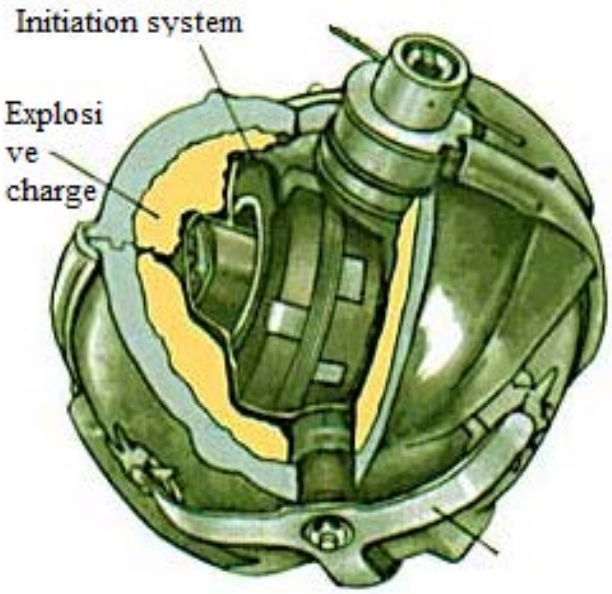		view the set mine POM-1S

FWP Ammunition

73

AMMUNITION FAMILY SLM / ALM

AMMUNITION TYPE	*Land Mine*
DESIGNATION	*Antipersonnel Fragmentation Mine in a Metal Body Scatterable,*
NAME/ASSIGNED MARK (original)	**POM -2 S**
COUNTRY of ORIGIN	*former USSR*

POM -2 S

total weight of mine with detonators and transport safety device [*kg*]	*1.6*
explosive type	*TNT or TNT/RDX*
weight of explosive [*kg*]	*0.14*
diameter [*mm*]	*63*
height of body [*mm*]	*105*
maximum height of body with stabilizers [*mm*]	*180*
length of the tripwire with sensors (m)	*to 5*
activation force greater than [*N*]	*10-50*
effect of mine	*Fragmentation up to 20 m*
type of fuze	*integrated part of mine (VP 09S)*
type of additional (anti-lift) fuze	

PACKING

Number of rounds in the package		**Weight of full package [*kg*]**	

DESCRIPTION

Antipersonnel fragmentation mine POM-2S was developed and produced in former USSR. The mine is scatterable, remote placed. Mines in canister are ejected from tubular container KPOM-2S (4 mines). A falling speed is about 9.5 m/s, the container is opened, which allows a distribution of the mine's canister. The mine is stabilized by metal fins on the ground.

COLOR and MARKING

Body colour:	*Olive*
Text colour:	*Black*

FUZE

Type	**Characteristic**
integrated of mine (VP09S)	*Mechanical, contact with electronic selfdestruction*

SAFETY CONSIDERATION THREAT

Mine is very sensitive. Simple removal of mine is very dangerous

NOTICE

Mine is very dangerous. The mine must be destroyed on the site. Do not touch, roll or move. Self-destruction after 23-24 h. There are two common types of mines POM-2S with different types of stabilizers: metal wings or the ribbon.

DRAWINGS/CUTAWAY/MARKING/STENCILING:		LEGEND
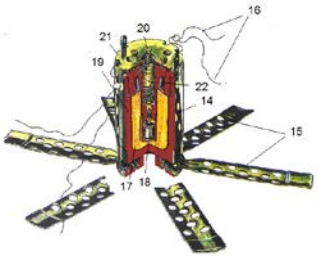 *Section of mines POM-2S*	 *Photo canister and mine POM-2S*	*1 - body of mine´s canister; 2 - stabilizers; 3 - marking the canister; 4 – marking the canister manufacturer ; 5 marking the lot of canister manufacture; 6 - marking the year of canister manufacture; 7 - marking the type of explosive used in mine; 8 – marking the minutes needed for firing system to expell mine from canister; 10 – marking the number of the mines to be loaded to the container VPO-9S or KPOM-2S; 11- 12 –marking the lot and year of canister loading 13 – base of the canister*
DESCRIPTION OF MINES *14 - Body of mine; 15 – stabilizer fins; 16 – tripwire with sensors; 17 - explosive; 18 - detonator; 19 - cords with the contact element; 20 - striker pin (pressure element); 21 – cover of the mine; 22 - fuze mechanism.*		

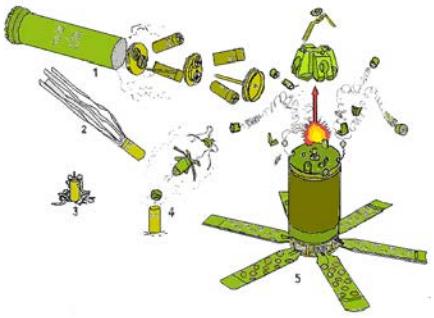

Scatter min POM-2S with canister

Marking <u>the canister KPOM 2S with four POM-2S mines</u>
1- KPOM 2S flight tray during the ejection of mines
2 - the flight of a single mine POM-2S with unit canister; 3 – an impact the unit canister with a single POM-2S expression on ground; 4 - expelling the mine POM-2S from the unit canister; 5 - arming the mine

container KPOM-2S - misfired

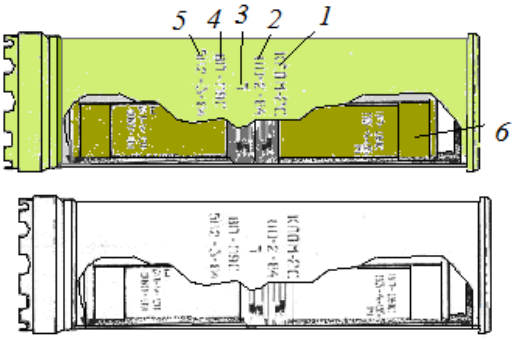

Container scheme KPOM-2S

<u>MARKING OF THE CONTAINER KPOM – 2S</u>
1 - marking the name of container ; 2- marking the manufacturer; lot of manufacture; year of container production; 3- marking the type of explosive in the mine; 4- marking the type of container fuze; 5- marking the number of the loaded mines; lot; year of container loading; 6- unit container with the mine POM-2S.

FWP Ammunition

74

AMMUNITION FAMILY ALM

AMMUNITION TYPE	*Submunition*
DESIGNATION	*Antipersonnel Fragmentation Submunition in a Metal Body*
NAME/ASSIGNED MARK (original)	**AO-2.5 RT**
COUNTRY of ORIGIN	*former USSR*

AO-2,5 RT

total weight of submunition with detonators and transport safety device [*kg*]	*2.5*
explosive type	*TNT/RDX*
weight of explosive [*kg*]	*0.303*
diameter [*mm*]	*90 (diameter of the ring 115)*
height of body [*mm*]	*143*
maximum height [*mm*]	
dimension of pressure plate [*mm*]	
activation force greater than [*N*]	
activation weight greater than [*kg*]	
effect of submunition	*Fragmentation up to 20 m*
type of fuze	*9E 246M*
type of additional (anti-lift) fuze	

PACKING

Number of rounds in the package		**Weight of full package [*kg*]**	

DESCRIPTION

Fragmentation antipersonnel submunition AO-2.5 RT was developed and produced in former USSR. It consists of two parts connected by a rotating ring with a central-type fuze 9E 246M. The submunition breaks into two halves after fuze detonation. Each half detonates independently through a pyrotechnic delay. The RBK-500 AO2.5 RT cluster has a canister shaped body, with a conical nose and eight fin drum tail unit. The cluster nose section houses an electro mechanical fuze for triggering the submunition, expelling system and container compartment holds 108 AO-2.5 RT bomblets. Each submunition has a lethal radius of 30 m against material, 20 m against unsheltered personnel and 10 m against entrenched personnel.

COLOR and MARKING

Body colour:	*olive green (or khaki); desert sand*
Text colour:	*black*

FUZE

Type	Characteristic
9E 246M	*Fuze integrated with the submunition, mechanical, contact, impact.*

SAFETY CONSIDERATION THREAT

Mine is very sensitive. Simple removal of submunition is very dangerous

NOTICE

Very dangerous. Destroy unexploded ordnance on the site. Do not touch, lift, roll or move

DRAWINGS/CUTAWAY/MARKING/STENCILING:		LEGEND
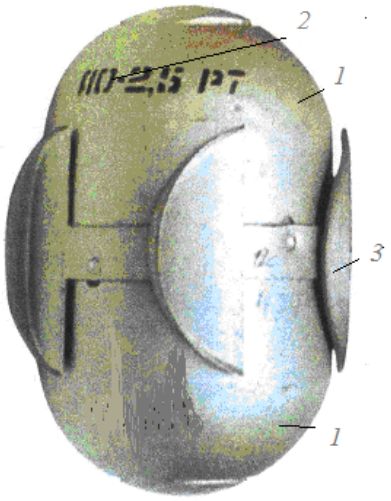	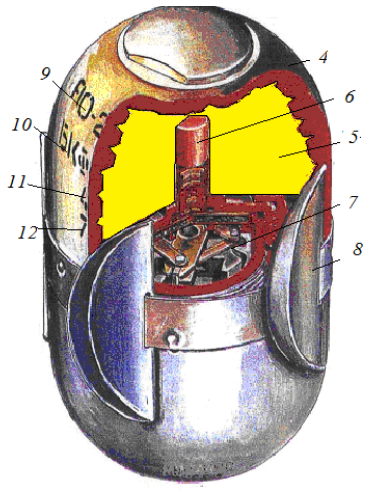	*1 - submunition body; 2 – marking the name of submunition; 3 - rotating ring; 4 – submunition body; 5 – explosive charge; 6 - detonator; 7 - 9E246M fuze mechanism; 8 - ring rotating with the mechanism of the fuze; 9 - marking the name of the submunition; 10 - marking the name of the container; 11 - marking the lot of manufacture; 12 - marking the year of manufacture*
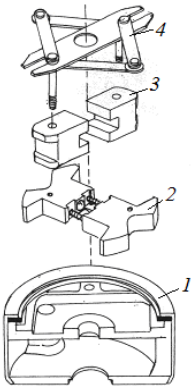 *fuze mechanism (without a detonator) type 9E246M*	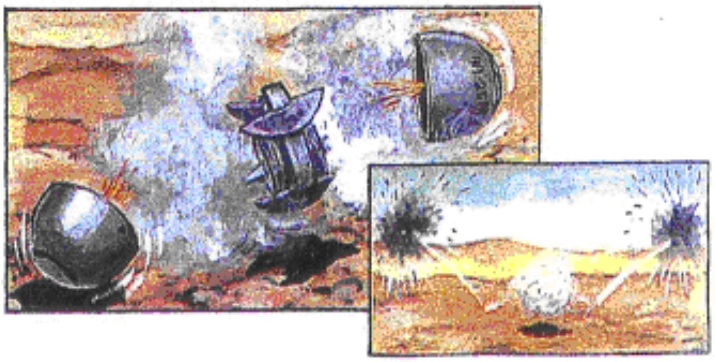 *principles of the submunition OA-2,5RT*	

Destruction of unexploded ordnance AO-2, 5 RT

FWP Ammunition

75

AMMUNITION FAMILY ALM

AMMUNITION TYPE	*Submunition*
DESIGNATION	*Antipersonnel Fragmentation Submunition in a Metal Body*
NAME/ASSIGNED MARK (original)	**AOB-2.5 RT**
COUNTRY of ORIGIN	*former USSR*

AOB-2.5 RT

total weight of submunition with detonators and transport safety device [*kg*]	*2,5*
explosive type	*TNT/RDX*
weight of explosive [*kg*]	*0.303*
diameter [*mm*]	*90 (diameter of the ring 115)*
height of body [*mm*]	*170*
maximum height [*mm*]	
dimension of pressure plate [*mm*]	
activation force greater than [*N*]	
effect of submunition	*Fragmentation up to 20 m*
type of fuze	*9E 246M*
type of additional (anti-lift) fuze	

PACKING

Number of rounds in the package		**Weight of full package [*kg*]**	

DESCRIPTION

Fragmentation aerial submunition AOB-2.5 RT was developed and produced in former USSR. It is a developed version of AO-2.5 RT. The main difference is in rotating ring. The bomb AO-2.5 RT has a rotating ring with steel wings; the bomb AOB-2.5RT has a plastic one. AOB-2.5 RT is a submunition designed to be used in the RBK-500U cluster bomb. The RBK-500U loaded with 126 pieces of AOB-2.5 RT, can be dropped from height from 100 m to 20 000 m on a velocity between from 500 km/h to 2000 km/h.

COLOR and MARKING

Body colour:	*olive green (or khaki); desert sand*
Text colour:	*black*

FUZE

Type	Characteristic
9E 246M	*Integrated fuze in the submunition, mechanical, impact.*

SAFETY CONSIDERATION THREAT

Mine is very sensitive. Simple removal of submunition is very dangerous

NOTICE

Very dangerous. Destroy unexploded ordnance on the site. Do not touch, lift, roll or move.

DRAWINGS/CUTAWAY/MARKING/STENCILING:	LEGEND
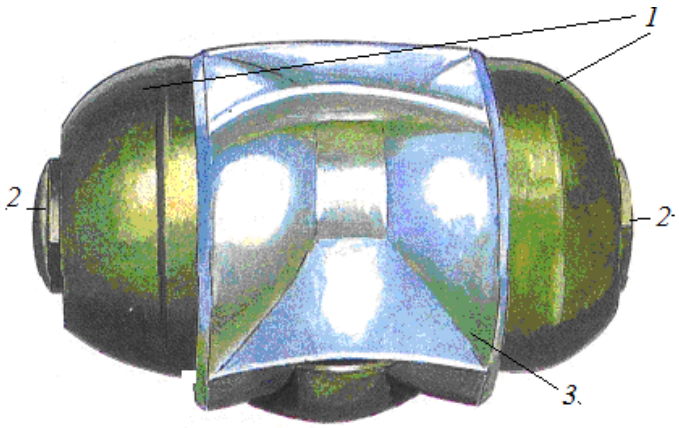 *submunition OAB-2,5RT*	*1- two halves of submunition semicircle 2- technical plug ; 3- rotating ring with fuze*
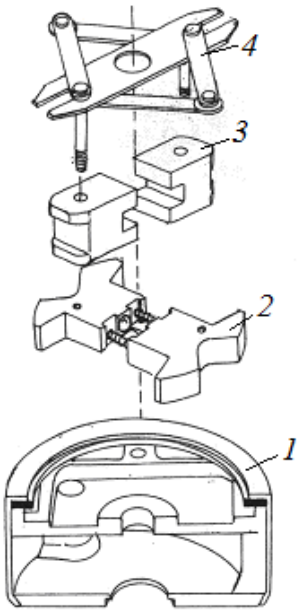 *fuze mechanism (without a detonator) type 9E246M*	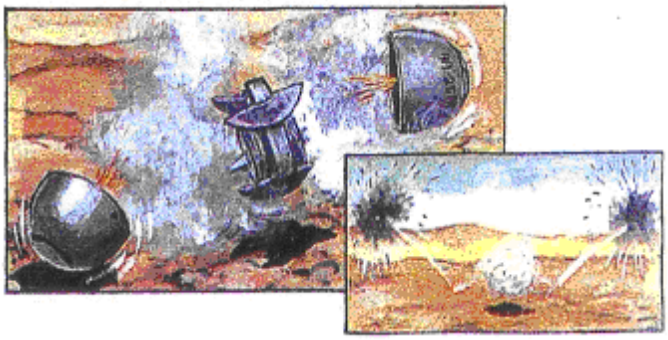 *principles of the submunition OAB-2,5RT*
FUZE LEGEND *1 - fuze body; 2 – inertial part of fuze; 3 - fixing part; 4 - spire.*	*Destruction of submunition - unexploded ordnance OAB-2, 5 RT*

FWP Ammunition

76

AMMUNITION FAMILY HEM

AMMUNITION TYPE	*Land Mine*
DESIGNATION	*Antipersonnel Fragmentation Mine in a Metal Body - Bounding*
NAME/ASSIGNED MARK (original)	**PSM-1**
COUNTRY of ORIGIN	*Bulgaria,*

PSM-1	
total weight of mine with detonators and transport safety device [*kg*]	*2.7*
explosive type	*TNT*
weight of explosive [*kg*]	*0.53*
diameter [*mm*]	*75*
height of body [*mm*]	*135*
diameter disc pressure [*mm*]	
activation force greater than [*N*]	*20 - 100*
effect of mine	*Fragmentation up to 50 m*
type of fuze	*MVN - 2M, MUV-2N, electric detonator EVU*
type of additional (anti-lift) fuze	

PACKING

Number of rounds in the package	*6*	**Weight of full package [*kg*]**	*25.6*

DESCRIPTION

Antipersonnel fragmentation mine PSM-1was developed and produced in Bulgaria. A principle of the mine is similar to the Soviet production mine of a series of OZM-72; OZM-3; OZM-4. Mine has about 1200 steel balls fragments. Characteristic feature of the mine is the adaptor, which allows installation of three fuzes at the same time. The fuzes MVN-2M, MUV-2N (contact or mechanical) can be used, the mine can be initiated also manually by using electrical detonator EVU (electrical command detonation). Mine was in service in many countries, e.g. Poland.

COLOR and MARKING

Body colour:	*Olive*
Text colour:	*Black*

FUZE

Type	**Characteristic**
series MUV	*Mechanical, contact, pressure*
MVN-2M	*Mechanical, contact, pressure*
EVU	*Electric detonator*

SAFETY CONSIDERATION THREAT

Mine is dangerous. Destroy on the place, Do not touch, roll or move. Simple removal of mine is very dangerous

NOTICE

DRAWINGS/CUTAWAY/MARKING/STENCILING:	LEGEND
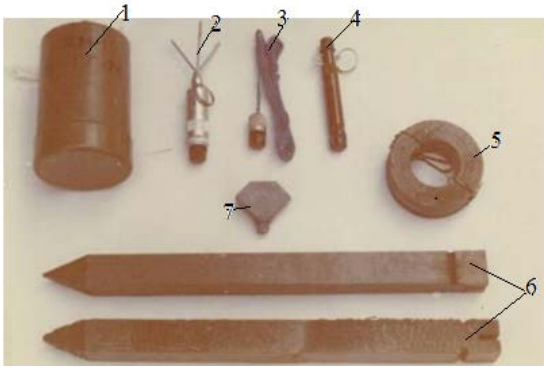 *Set mines PSM-1-Polish version*	*1 - mine PSM-1; fuze MVN-2M; 3 - electric detonator EVU; 4 - fuze series MUV; 5 - steel wire 0,7 mm, wooden stakes*
 Set mines PSM-1-practice -Polish version. white stripe	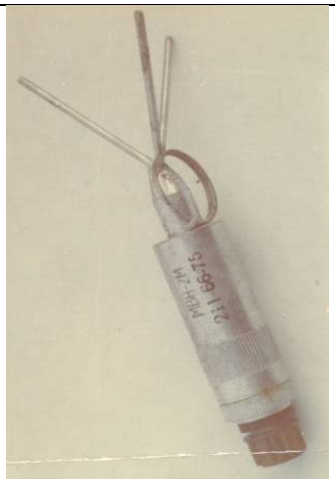 *Fuze MVN-2M*
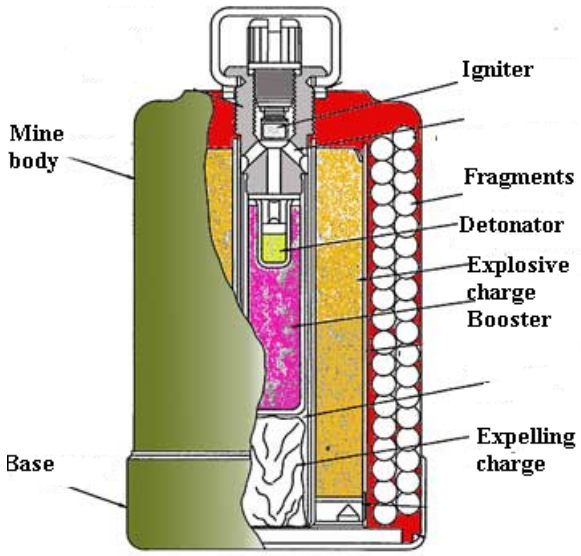	

FWP Ammunition

77

AMMUNITION FAMILY HEM

AMMUNITION TYPE	*Land Mine*
DESIGNATION	*Antipersonnel Fragmentation Mine in a Metal Body-Stake Mine*
NAME/ASSIGNED MARK (original)	**Type - 58**
	CHINA

Type 58	
total weight of mine with detonators and transport safety device [*kg*]	*1.74*
explosive type	*TNT*
weight of explosive [*kg*]	*0.075*
diameter [*mm*]	*60*
height of body [*mm*]	*106*
dimension of pressure plate [*mm*]	
activation force greater than [*N*]	*50 - 100*
effect of mine	*Fragmentation up to 10 m*
type of fuze	*China version of tripwire pull fuze MUV;*
type of additional (anti-lift) fuze	

PACKING

Number of rounds in the package	*8*	**Weight of full package [*kg*]**	*20.,6*

DESCRIPTION

Antipersonnel fragmentation mine type 58 was developed and produced in Chine. It is an alternative of USSR mine POMZ-2. Mine was used in the former USSR as well, mainly in the forces in the Far East. Fuzes from series MUV or their Chinese versions can be applied. Simple design. The mine consists of cast iron fragmenting body with six rows serration (total 60 pcs) containing explosive charge. A tripwire pull fuze is threaded into the top of the body. The entire unit is set on a wooden mounting stake.

COLOR and MARKING

Body colour:	*Olive*
Text colour:	*Black*

FUZE

Type	**Characteristic**
Model 58	*Mechanical, contact, tension- pressure*

SAFETY CONSIDERATION THREAT

Simple removal of mines is very dangerous

NOTICE

Mine type58 is a modification from mine POMZ-2. The license was given to the Chinese People's Republic by the former USSR in the framework of military aid in 1958, hence comes the name. There are small differences between these two mines, mainly in weight and top of the mines.

DRAWINGS/CUTAWAY/MARKING/STENCILING:		LEGEND
	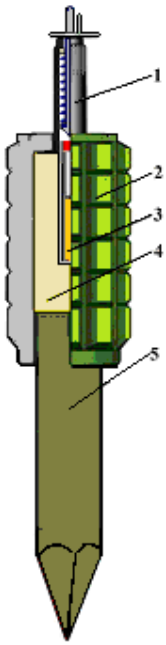	*1 - fuze-MUV;* *2 – body of mine;* *3 – booster charge;* *4 - explosive charge- 75 g of TNT;* *5 - wooden stake.*
pay attention to 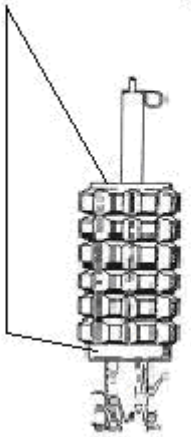		

FWP Ammunition

78

Type of ammo
Landmine Anti-Personnel

FIELD of AMMUNITION	*Antipersonnel Mine*
NAME	*Antipersonnel Fragmentation Mine in a Metal Body*
NAME/ASSIGNED MARK (original)	**MBV78A1**
COUNTRY of ORIGIN	*North Vietnam*

MBV78A1	
total weight of mine with detonators and transport safety device [*kg*]	*1.77*
explosive type	*TNT*
weight of explosive [*kg*]	*0.75*
diameter mine [*mm*]	*64*
side height mine [*mm*]	*107*
maximum height of mine [*mm*]	
diameter disc pressure [*mm*]	
activation force greater than [*N*]	
activation weight greater than [*kg*]	*5-10*
effect of mine - to the width [*m*]	*Fragments up to 50*
type of central fuze	*Series MUV;*
type of additional (anti-lift) fuze	

PACKING

Number of rounds in the crate	*8*	**Weight of full crate [*kg*]**	*20,6*

DESCRIPTION

The antipersonnel fragmentation mine MBV78A1 was developed and produced in North Vietnam. Mine is produce under the license of e USSR mine POMZ-2. There are small differences in certain details; the main difference is the higher flange on the fuze socket. The Soviet Army also used this version POMZ-2 mines in Afghanistan.

COLOR and MARKING

Body colour:	*Olive*
Text colour:	*Black*

FUZE

Type	**Characteristic**
Series MUV	*mechanical, contact, pressure*

SAFETY CONSIDERATION THREAT

Simple removal of mine is very dangerous

NOTICE

Mine MBV78A1 is a version of antipersonnel mine POMZ-2 with small design changes, therefore is the possibility to confuse between them.

DRAWINGS/CUTAWAY/MARKING/STENCILING:		LEGEND
 Mine **MBV78A1** *in combat position*	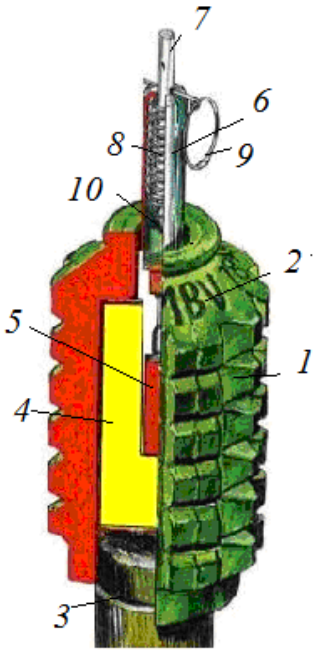 *Mine* ***MBV78A1***	*1 - body of mine; 2 - marking - the name of the mine; 3 - the retaining pin; 4 - explosive charge; 5 – booster charge; 6 - MUV fuze body; 7 - striker; 8 - spring; 9 – safety pin*

FWP Ammunition

79

AMMUNITION FAMILY HEM

AMMUNITION TYPE	*Land Mine*
DESIGNATION	*Antipersonnel Fragmentation Mine in a Metal Body*
NAME/ASSIGNED MARK (original)	**MBV78A2**
COUNTRY of ORIGIN	*Nortth Vietnam*

MBV78A2	
total weight of mine with detonators and transport safety device [*kg*]	1.5
explosive type	*TNT*
weight of explosive [*kg*]	*0.075*
diameter[*mm*]	*50*
height of body [*mm*]	*80*
dimension of pressure plate [*mm*]	
activation force greater than [*N*]	*50 – 100*
effect of mine [*m*]	*Fragmentation up to 30*
type of fuze	*series MUV*
type of additional (anti-lift) fuze	

PACKING

Number of rounds in the package		**Weight of full package [*kg*]**	

DESCRIPTION

Antipersonnel fragmentation mine MBV78A2 was developed and produced in North Vietnam. The mine is based on the USSR mine POMZ -2. The mine has cylindrical metal body (cast iron) and fragmentation sleeve. The mine uses the MUV type fuzes. On the body side are two handles (hooks) for fixing the mine to the static elements (stakes, trees, building's walls) or mounting to the rack. Mine with the fuze UZRG can be used like hand grenade.

COLOR and MARKING

Body colour:	*olive green (khaki) or gray*
Text colour:	-------

FUZE

Type	**Characteristic**
type MUV	*mechanical, contact, pressure*
UZRG	*If the mine is used like hand grenade, mechanical, contact or impact.*

SAFETY CONSIDERATION THREAT

Simple removal of mine is very dangerous

NOTICE

Mine was also used as hand grenade (defensive hand grenade) with the fuze UZRG.

DRAWINGS/CUTAWAY/MARKING/STENCILING:			LEGEND
Photo – the mine ***MBV78A2***	*Photo mine MBV78A2 without fuze*	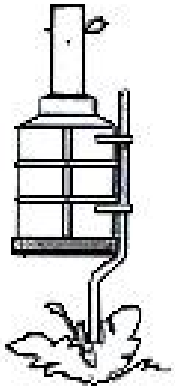	*1 - body of mine; 2 - explosive charge; 3 - fragments-steel balls (pieces of steel wire); 4 - hooks for attachment; 5 - booster; 6 - striker; 7 – striker spring; 8 - safetyr pin; 9 - Protective cap; 10 – Base cover; 11 - cover the fuze well.*
the basic elements of mine ***MBV78A2***	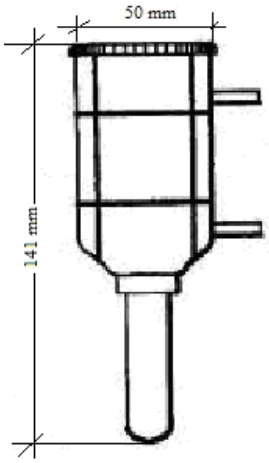 *dimensions mine -drawing*	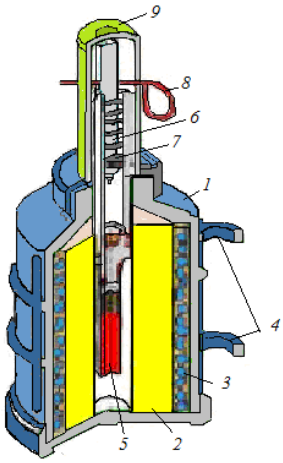	

FWP Ammunition

80

AMMUNITION FAMILY HEM

AMMUNITION TYPE	*Land Mine*
DESIGNATION	*Antipersonnel Blast Mine in a Plastic Body*
NAME/ASSIGNED MARK (original)	**MD 82 B**
COUNTRY of ORIGIN	*North Vietnam*

MD 82 B	
total weight of mine with detonators and transport safety device [*kg*]	*0.128*
explosive type	*TNT / RDX*
weight of explosive [*kg*]	*0.028*
diameter [*mm*]	*57*
height of body [*mm*]	*55*
dimension of pressure plate [*mm*]	
activation force greater than [*N*]	*50 - 100*
effect of mine	*up to 1 m*
type of fuze	*Series MUV*
type of additional (anti-lift) fuze	

PACKING

Number of rounds in the package		**Weight of full package [*kg*]**	

DESCRIPTION

The antipersonnel blast mine MD 82 D was developed and produced in Vietnam. The mine is similar to the American mine M 14. Mine has integrated fuze. When pressure is applied to the top of the mine the striker initiates the detonator. Used in Vietnam and Cambodia. A required pressure for the mine activation is about 5 kg.

COLOR and MARKING

Body colour:	*olive green (khaki)*
Text colour:	*black*

FUZE

Type	**Characteristic**
Integrated	*mechanical, contact or pressure*

SAFETY CONSIDERATION THREAT

Simple removal of mine is very dangerous

NOTICE

Mine MD 82 B is the modification of the American M14 mine, copied by specialists of the former USSR during the conflict on the Vietnam peninsula.

DRAWINGS/CUTAWAY/MARKING/STENCILING:			LEGEND
Photo mine MD-82B	*Photo mine MD-82B*	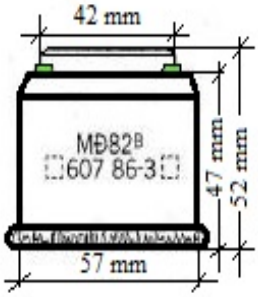	*1 – marking the name of mine; 2 – marking the mine manufacturer ; 3 – marking the year of manufacture; 4 – marking the lot of manufacture; 5 - transport safety pin.*
Photo mine MD-82B	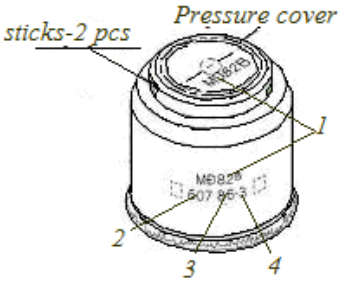	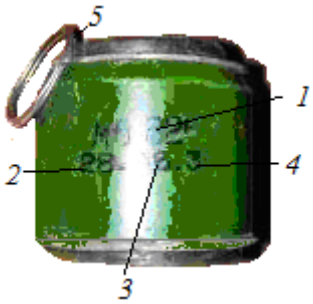	

FWP Ammunition

81

AMMUNITION FAMILY HEM

AMMUNITION TYPE	*Land Mine*
DESIGNATION	*Antipersonnel Fragmentation Mine in a Metal Body-Bounding Mine*
NAME/ASSIGNED MARK (original)	**Type-69**
COUNTRY of ORIGIN	*China*

Type-69	
total weight of mine with detonators and transport safety device [*kg*]	*1.35*
explosive type	*TNT*
weight of explosive [*kg*]	*0.1*
diameter [*mm*]	*60*
height of body [*mm*]	*114*
dimension of pressure plate [*mm*]	
activation force greater than [*N*]	*70 - 200*
effect of mine	*Fragmentation up to 50 m*
type of central fuze	*China developed own pressure-tripwire fuze*
type of additional (anti-lift) fuze	

PACKING

Number of rounds in the package	*8*	**Weight of full package [*kg*]**	*20,1*

DESCRIPTION

Antipersonnel fragmentation bounding mine Type- 69 was developed and produced in China. Mine is the version of the mine OZM-3, former USSR production. There are small differences, mainly in size and marking. Initiation can be done by fuze or electrical igniter, which ignites a propellant charge (expelling charge) in a basement of the mine, then expels a disc to propel the mine body into the air to a height of approximately 1.5 m. The pyrotechnic delay initiates the detonator and main charge to shatter the steel body into fragments. The mine is used by the Chinese Army and exported to many countries in Asia.

COLOR and MARKING

Body colour:	*olive green (khaki)*
Text colour:	*black*

FUZE

Type	***Characteristic***
China development or series MUV	*mechanical, contact, tension-pressure*

SAFETY CONSIDERATION THREAT

Simple removal of mine is very dangerous

NOTICE

Mine Type-69 was developed and modified from the former USSR mine OZM-3. The structural data was provided to China. It is used by China, Vietnam, and Northern Cambodia. Often confused with the OZM-3.

DRAWINGS/CUTAWAY/MARKING/STENCILING:			LEGEND
mine type 69 photo	*Mine type 69 in combat position*	*Mine type 69*	*1- body of mine; 2- fuze well; 3- electrical initiator well; 4- marking the type of mine; 5- marking in china´s signs–lot and year of manufacture 6- marking the lot of manufacture 7- marking the year ot of manufacture ; 8 - index- lot of manufacture;*
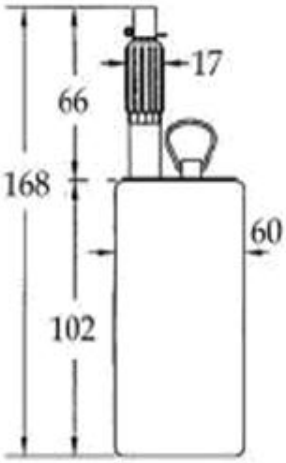	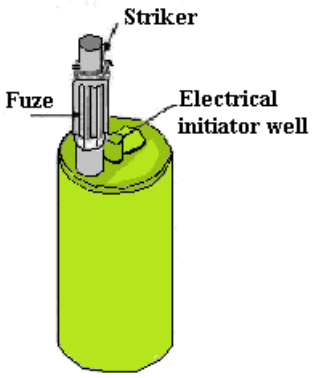 *Figure mine type 69*		

FWP Ammunition

82

AMMUNITION FAMILY HEM

AMMUNITION TYPE	*Land Mine*
DESIGNATION	*Antipersonnel Fragmentation Mine in a Metal Body*
NAME/ASSIGNED MARK (original)	***P – 40 Ball (Apple) mine***
COUNTRY of ORIGIN	*Vietnam*

40 mm improvised (commonly called 40)

total weight of mine with detonators and transport safety device [*kg*]	*0.614*
explosive type	*TNT*
weight of explosive [*kg*]	*0.12*
diameter [*mm*]	*43*
height of body [*mm*]	*99*
dimension of pressure plate [*mm*]	
activation force greater than [*N*]	*50 - 100*
effect of mine	*Fragmentation up to 30 m*
type of fuze	*improvised, pressure*
type of additional (anti-lift) fuze	

PACKING

Number of rounds in the package		**Weight of full package [*kg*]**	

DESCRIPTION

Antipersonnel fragmentation mine P-40 was produced in Vietnam. The mine was made out of using the spherical steel cases of US BLU-24/B and BLU-66 submunition placed on top, which is a plastic adaptor to accommodate a MUV style tripwire fuze. The mine body is grooved to help tear up for fragmentation. The grooves are either internal or external; it depends on the variant of submunition used as the basis of the mine. The mine is normally mounted on a small three pronged stake and has an effective radius of around 10 meters. The P-40 is also referred to as the "Apple" mine in Cambodia.

COLOR and MARKING

Body colour:	*olive green (khaki)*
Text colour:	*black*

FUZE

Type	***Characteristic***
improvised,	*mechanical, contact, tension-pressure*

SAFETY CONSIDERATION THREAT

Various types of submunition were used as composition of the mine.

NOTICE

DRAWINGS/CUTAWAY/MARKING/STENCILING:	

FWP Ammunition

83

AMMUNITION FAMILY HEM

AMMUNITION TYPE	*Land Mine*
DESIGNATION	*Antipersonnel Fragmentation Mine in a Metal Body*
NAME/ASSIGNED MARK (original)	***40 mm improvised (commonly called 40)***
COUNTRY of ORIGIN	*North Vietnam*

40 mm improvised (commonly called 40)	
total weight of mine with detonators and transport safety device [*kg*]	*0.227*
explosive type	*Composition B*
weight of explosive [*kg*]	*0.032*
diameter [*mm*]	*43*
height of body [*mm*]	*99*
dimension of pressure plate [*mm*]	
activation force greater than [*N*]	*50 - 100*
effect of mine	*Fragmentation up to 30 m*
type of fuze	*improvised, pressure*
type of additional (anti-lift) fuze	

PACKING

Number of rounds in the package		**Weight of full package [*kg*]**	

DESCRIPTION

Antipersonnel fragmentation mine improvised 40 mm was produced in Vietnam. The mine is constructed from US BLU-24 (24B) antipersonnel submunition that either did not detonate on impact or were taken from capture munition stores during and after Vietnam War. The submunition was embedded to the empty 40 mm grenade cartridge cases (after removing the propellant charge from the cartridge case). To the upper part was placed pressure disc and mechanical contact improvised fuze.

COLOR and MARKING

Body colour:	*olive green (khaki)*
Text colour:	*black*

FUZE

Type	***Characteristic***
improvised,	*mechanical, contact, tension - pressure*

SAFETY CONSIDERATION THREAT

Various types of submunition were used to construct the mine.

NOTICE

Similar structures recovered in the 90's of last century in Afghanistan during the intervention of the former USSR. They were made of 30 mm grenades, grenade fired from AGS-17 grenade launcher and model 974 "PALLAD".

DRAWINGS/CUTAWAY/MARKING/STENCILING:		LEGEND
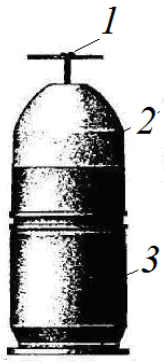	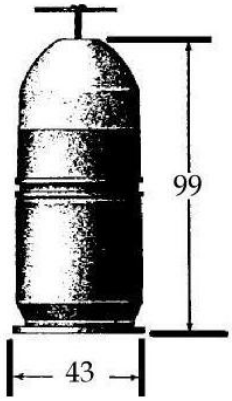	*1- 40mm cartridge case; 2- submunition BLU 24; 3- sttel plug wuth fuzr well; 4- striker fixing plate; 5- safety 6- transport safety; 7- cover; 8- striker pin 9- pressure disc*
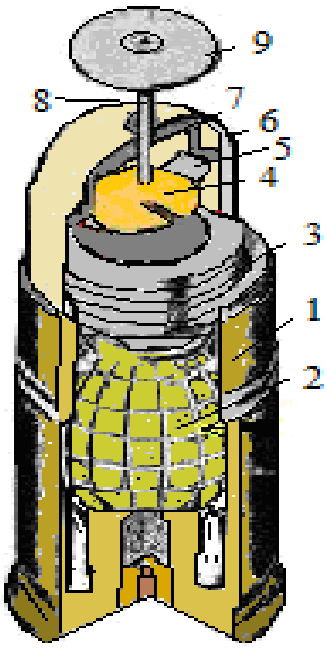		

FWP Ammunition

84

AMMUNITION FAMILY HEM

AMMUNITION TYPE	*Land Mine*
DESIGNATION	*Anti-personnel Fragmentation Mine in a Metal Body- Bounding Mine*
NAME/ASSIGNED MARK (original)	**PROM -1**
COUNTRY of ORIGIN	*Former Yugoslavia*

total weight of mine with detonators and transport safety device [*kg*]	*3.0*
explosive type	*RDX/TNT – 50/50*
weight of explosive [*kg*]	*0.425*
diameter [*mm*]	*75*
height of body [*mm*]	*284*
dimension of pressure plate [*mm*]	*Diameter 65*
activation force greater than [*N*]	*30 - 100*
effect of mine	*Fragmentation up to 50 m*
type of fuze	*UPROM -1;*
type of additional (anti-lift) fuze	

PACKING

Number of rounds in the package	*9*	**Weight of full package [*kg*]**	*25.6*

DESCRIPTION

Antipersonnel fragmentation bounding mine PROM-1 was developed and produced in former Yugoslavia. Mine is a developed version of the former USSR mine OZM-3. The bottle-shaped cast steel body has a central fuze. The detonator is fixed within the mine body. Initiating the fuze ignites a propellant charge in a central tube, which blows off the base to expel the mine body into the air to the height of about 70-80 cm. A tether wire initiates the detonator and explosive charge to shatter the steel body into fragments.

COLOR and MARKING

Body colour:	*olive green (khaki)*
Text colour:	*black*

FUZE

Type	***Characteristic***
UPROM -1;	*mechanical, contact, tension- pressure*

SAFETY CONSIDERATION THREAT

Simple removal of mine is very dangerous

NOTICE

Antipersonnel mine production of the former Yugoslavia is structurally similar to mine in a series of former USSR OZM-3 and German mine S.Mi.44 from World War II.

DRAWINGS/CUTAWAY/MARKING/STENCILING:			LEGEND
mine PROM-1	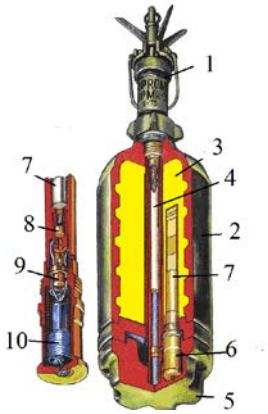 *Section of mine PROM-1*		*1 - fuze UPROM-1 2 - body of the mine; 3 - explosive charge; 4 – expelling charge 5 - the base of the mine; 6 – initiator 7 - detonator; 8 –primer 9 - striker; 10-tether wire ;* ***<u>Description the fuze UPROM-1</u>*** *11 - safety pin; 14 - spring; 15 – striker ; 16 - steel balls; 17 - primer;18 - detonator; 19 - marking - type of fuze, 20 - fuze body; 21 - detonator well*
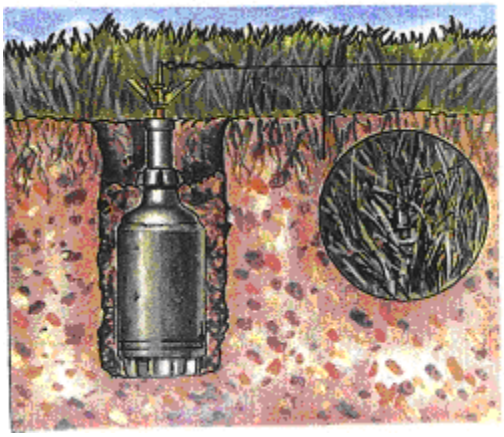 *placed mine PROM-1*		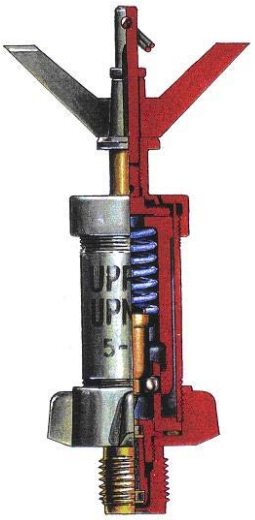	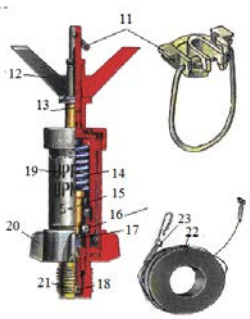 *fuze UPROM-1*

FWP Ammunition

85

AMMUNITION FAMILY HEM

AMMUNITION TYPE	*Land Mine*
DESIGNATION	*Antipersonnel Fragmentation Mine in a Metal Body –Stake Mine*
NAME/ASSIGNED MARK (original)	**PMR -1**
COUNTRY of ORIGIN	*Former Yugoslavia*

PMR -1	
total weight of mine with detonators and transport safety device [*kg*]	*2.0*
explosive type	*TNT*
weight of explosive [*kg*]	*0.075*
diameter [*mm*]	*80*
height of body [*mm*]	*120*
dimension of pressure plate [*mm*]	
activation force greater than [*N*]	*30 - 100*
effect of mine	*Fragmentation up to 50 m*
type of fuze	*UMP-1, RO-1*
type of additional (anti-lift) fuze	

PACKING

Number of rounds in the package	*9*	**Weight of full package [*kg*]**	*23.8 kg*

DESCRIPTION

Antipersonnel fragmentation stake mine PMR-1 was produced in former Yugoslavia. PMR-1 is a tripwire-activated anti-personnel fragmentation stake mine similar to former USSR mine POMZ-2. Mine has nine rows of serrations in cylindrical cast iron fragments body, 75 grams explosive charge, MUV type tripwire fuze and wooden stake. Pull on the tripwire extracts the striker retaining pin, releasing the spring-loaded striker onto the percussion detonator assembly.

COLOR and MARKING

Body colour:	*olive green (khaki)*
Text colour:	*black*

FUZE

Type	***Characteristic***
series MUV; RO-1, UMP-1	*mechanical, contact, tension-pressure*

SAFETY CONSIDERATION THREAT

Simple removal of mine is very dangerous

NOTICE

Rules for disarming the mine PMR 2 are the same like rules for POMZ-2 M.

DRAWINGS/CUTAWAY/MARKING/STENCILING:			LEGEND
*Mine **PMR -1***	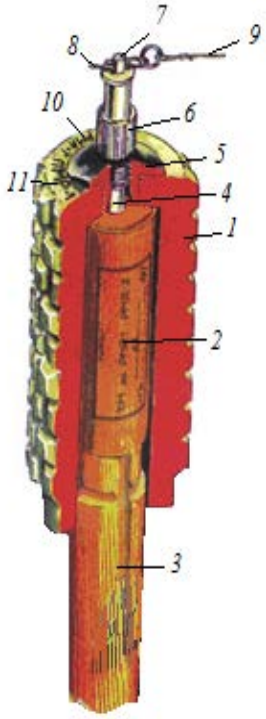 *cross-section of mine PMR-1*	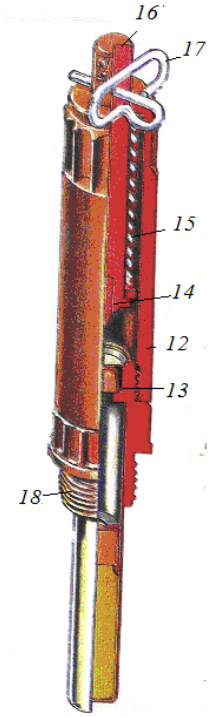 *fuze RO-1 with a detonator Z.Z. 42*	*1- body of mine; 2 - explosive charge; 3 - wooden stake; 4 - detonator; 5 - the fuze well 6 - fuze; 7 – striker ; 8 – striker retaining pin; \9 - tripwire; 10-marking the type of mine in the English language; 11 - marking the type of mine in Yugoslavia language; 12 - body of the fuze ; 13 - detonator Z.Z.42; 14 - striker needle; 15 – striker spring ; 16- striker; 17 - striker retaining pin; 18 - detonator well.*
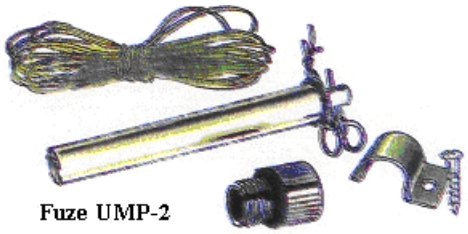 **Fuze UMP-2**			

FWP Ammunition

86

AMMUNITION FAMILY HEM

AMMUNITION TYPE	*Land Mine*
DESIGNATION	*Antipersonnel Fragmentation Mine in a Concrete Body – Stake Mine*
NAME/ASSIGNED MARK (original)	**PMR -2**
COUNTRY of ORIGIN	*former Yugoslavia*

PMR -2	
total weight of mine with detonators and transport safety device [*kg*]	*2.0*
explosive type	*TNT*
weight of explosive [*kg*]	*0,10*
diameter [*mm*]	*60*
height of body [*mm*]	*120*
dimension of pressure plate [*mm*]	
activation force greater than [*N*]	*30 - 100*
effect of mine	*Fragmentation up to 50 m*
type of fuze	*series MUV; RO-1, UMP-2; UPMR-2AS*
type of additional (anti-lift) fuze	

PACKING

Number of rounds in the package	*9*	**Weight of full package [*kg*]**	*23.7*

DESCRIPTION

Antipersonnel fragmentation stake mine PMR-2 was developed and produced in former Yugoslavia. The mine is a variation of former USSR mine POMZ-2. Mine is in the arsenals of countries formed after the breakup of the former Yugoslavia. Used during the Balkan conflicts. The difference between the two mines the PMR-2 and PMR-1 is minor. Mainly it is the increase of explosive charge from 75 to 100 g. Fuze used in this mine can be any tripwire type fuze. The mine has concrete or scrapped metal body.

COLOR and MARKING

Body colour:	*olive green (khaki)*
Text colour:	*black*

FUZE

Type	***Characteristic***
series MUV; RO-1, UMP-2; UPMR-2AS	*mechanical, tension-pressure, contact*

SAFETY CONSIDERATION THREAT

Simple removal of mine is very dangerous

NOTICE

Rules to disarm the mine PMR 2 are the same like for the mine POMZ-2 M or PMR-2A.

DRAWINGS/CUTAWAY/MARKING/STENCILING:		LEGEND
	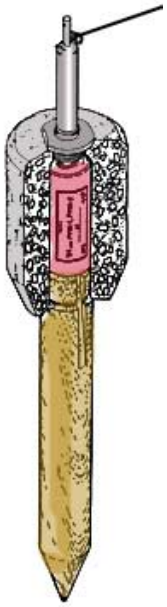	
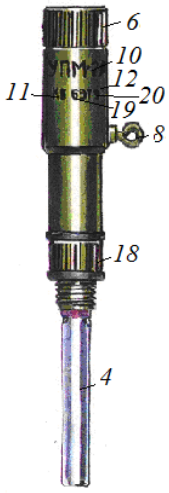 *FUZE UPM-2*		*Fuze RO-1 with a detonator Z.Z. 42* *12 - body of the fuze RO-1 ; 13 - detonator Z.Z.42; 14 - striker needle; 15 – striker spring ; 16- striker; 17 - striker retaining pin; 18 - detonator well.* 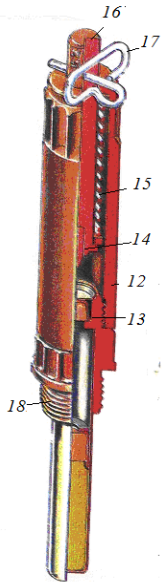

FWP Ammunition

87

AMMUNITION FAMILY HEM

AMMUNITION TYPE	*Land Mine*
DESIGNATION	*Antipersonnel Fragmentation Mine in a Metal Body - Stake Mine*
NAME/ASSIGNED MARK (original)	**PMR-2A**
COUNTRY of ORIGIN	*Former Yugoslavia*

PMR -2A

total weight of mine with detonators and transport safety device [*kg*]	*2.0*
explosive type	*TNT*
weight of explosive [*kg*]	*0,100*
diameter (mm)	*66*
height of body (mm)	*140*
dimension of pressure plate [*mm*]	
activation force (greater than) [*N*]	*70 - 200*
effect of mine	*Fragmentation up to 50 m*
type of fuze	*series MUV, UPM-2*
type of additional (anti-lift) fuze	

PACKING

Number of rounds in the package		**Weight of full package [*kg*]**	

DESCRIPTION

Antipersonnel fragmentation stake mine PMR-2A was developed and produced in former Yugoslavia. PMR-2A is a tripwire-activated antipersonnel fragmentation stake mine. The mine consists of a heavily grooved (9 rows) cylindrical cast steel body, 100-gram TNT charge, a tripwire-activated fuze and a wooden stake. This mine is tripwire initiated using a pull fuze. Pull on the tripwire extracts the striker retaining pin, releasing the spring-loaded striker onto the percussion detonator assembly. The fuze is screws into a central well on the top of the mine body, with the detonator protruding down into the explosive charge.

COLOR and MARKING

Body colour:	*Olive*
Text colour:	*Black*

FUZE

Type	**Characteristic**
series MUV, UPM-2	*mechanical, contact, tension-pressure*

SAFETY CONSIDERATION THREAT

Simple removal of mine is very dangerous

NOTICE

Mine is dangerous, is to be destroyed on the place. The possibility of disarmament like the mine POMZ-2.

DRAWINGS/CUTAWAY/MARKING/STENCILING:		LEGEND
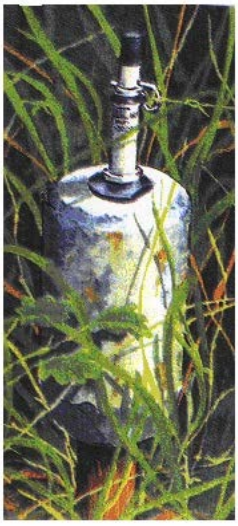 **Mine PMR-2** *mine PMR-2A*	*mine PMR- 2* 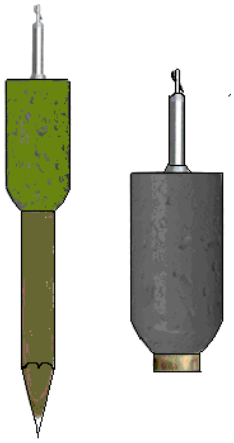 *mine PMR- 2*	*1 - fuze; 2 – body of mine ; 3 - detonator; 4 - explosive charge; 5 – wooden stake; 6 – internal grooves* 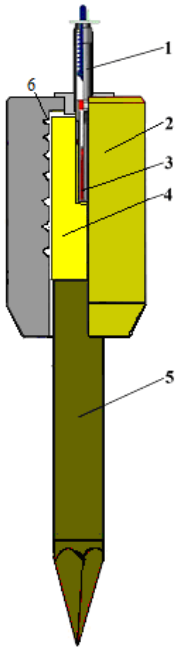 *mine PMR-2* 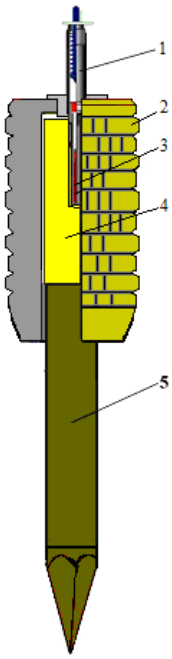 *mine PMR-2A*
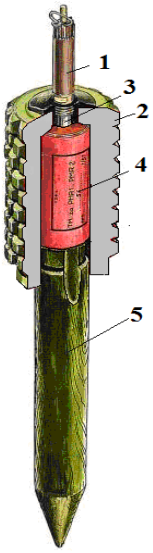 *Mine PMR-2 A*		

FWP Ammunition

88

AMMUNITION FAMILY HEM

AMMUNITION TYPE	*Land Mine*
DESIGNATION	*Antipersonnel Fragmentation Mine in a Metal Body – Stake Mine*
NAME/ASSIGNED MARK (original)	**PMR -3**
COUNTRY of ORIGIN	*Former Yugoslavia*

PMR -3 (versions 1 and 2)	
total weight of mine with detonators and transport safety device [*kg*]	*2.41*
explosive type	*TNT*
weight of explosive [*kg*]	*0.410*
diameter (mm)	*78*
height of body (mm)	*128*
dimension of pressure plate [*mm*]	
activation force (greater than) [*N*]	*30 - 90*
effect of mine	*Fragmentation up to 35 m*
type of fuze	*UPROM -3*
type of additional (anti-lift) fuze	

PACKING

Number of rounds in the package		**Weight of full package [*kg*]**	

DESCRIPTION

Antipersonnel fragmentation stake mine PMR-3 was developed and produced in former Yugoslavia. The design is similar to design PMR-1 and PMR-2 mines. Mine uses fuze UPROM-3, similar to fuze UPROM-1. Two versions were developed, version 1 with grooves outside of the mine body and version 2 without grooves. Version 1 was used more often than version 2. The first version has the possibility for different fuzes and setting up the mines sensitivity on the contact and blasts. Cylindrical body has six grooves. Often used with fuzes version of MUV. Improvements over the PMR-2 mine includes a heavier main explosive charge, increased fragmentation and the fuze function like pressure or tripwire (radial pull) mode. The mine has aluminum mounting stake.

COLOR and MARKING

Body colour:	*Olive*
Text colour:	*Black*

FUZE

Type	**Characteristic**
UPROM -3	*mechanical, contact, pressure*

SAFETY CONSIDERATION THREAT

Simple removal of mine is very dangerous

NOTICE

Mine is dangerous and is to be destroyed on the site. The possibility of disarmament.

DRAWINGS/CUTAWAY/MARKING/STENCILING:			LEGEND
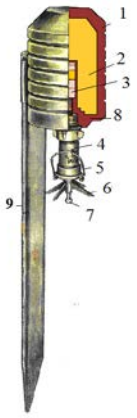	*components of mine PMR-3 version 1*		*1-body of mine; 2 - explosive charge; 3 - detonator; 4 - fuze UPROM-1;* *5 – transport safety pin; 6 - prongs ; 7 - striker ; 8 – cover of the mine body* *9 - metal stake;*
PMR-3 expression in attack position.	*mine PMR-3*	*Cross section and complete fuze UPROM-1*	*mine PMR-3-version 2*
mine PMR-3 version 1 .			

FWP Ammunition

89

AMMUNITION FAMILY HEM

AMMUNITION TYPE	*Land Mine*
DESIGNATION	*Antipersonnel Blast Mine in a Plastic Body*
NAME/ASSIGNED MARK (original)	**PMA-1A**
COUNTRY of ORIGIN	*former Yugoslavia*

PMA-1A

total weight of mine with detonators and transport safety device [*kg*]	*0.4*
explosive type	*TNT*
weight of explosive [*kg*]	*0.20*
length of body (mm)	*140*
width of body (mm)	*70*
height of body (mm)	*31*
dimension of pressure plate [*mm*]	
activation force greater than [*N*]	*30*
effect of mine	*Up to 1 m*
type of fuze	*UPMAH-1 or type of MUV*
type of additional (anti-lift) fuze	

PACKING

Number of rounds in the package		**Weight of full package [*kg*]**	

Antipersonnel blast mine PMA-1A was produced in former Yugoslavia. Mine has plastic body (ebonite). The mine consists of a plastic box with a hinged lid, a crush-activated fuze, 200 g block of TNT and brass safety pin. The detonator and fuze are inserted into one end of TNT block, which is placed in the base of the box. Once the safety pin has been removed, the hinged lid rests on the end of the fuze. Pressure on the hinged lid crushes the end of fuze to create a flash, which initiates the detonator and main charge.

COLOR and MARKING

Body colour:	*Olive*
Text colour:	*Black*

FUZE

Type	**Characteristic**
UPMAH-1, MUV	*mechanical, contact, pressure*

SAFETY CONSIDERATION THREAT

Mine is very sensitive. Simple removal of mine is very dangerous

NOTICE

Mine is very dangerous. Mine is to be destroyed on the site. Do not touch, roll or move.

DRAWINGS/CUTAWAY/MARKING/STENCILING:		LEGEND
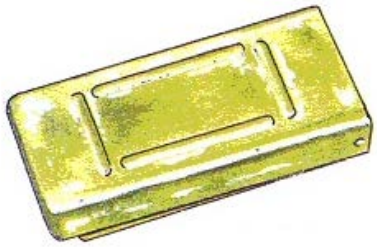		*1 - the hinged lid ; 2 - spring; 3 - reinforcement the hinged lid; 4 - the base part of mine body ; 5 – explosive charge; 6 - fuze UPMAH-1.* *<u>fuze UPMAH-1 –description</u>* *7 – body of fuze; 8 - glass ampoule; 9 - initiating mixture; 10 - incendiary explosive - lead azide; 11 - detonator ; 12 - mounting thread.*
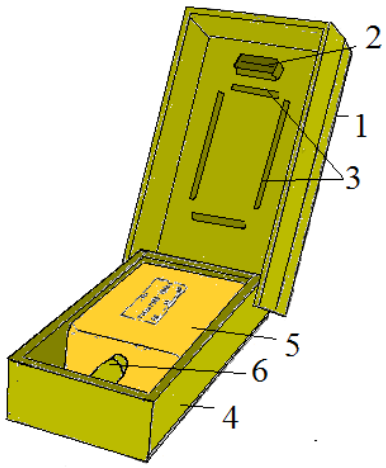 *mine PMA-1A with 200gr TNT and fuze UPMAH-1*	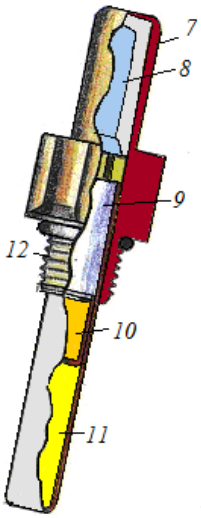 *fuse UPMAH-1*	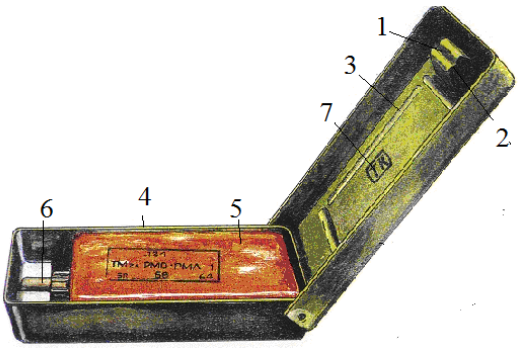 *mine PMA-1A with 200gr TNT block and fuze UPMAH-1*
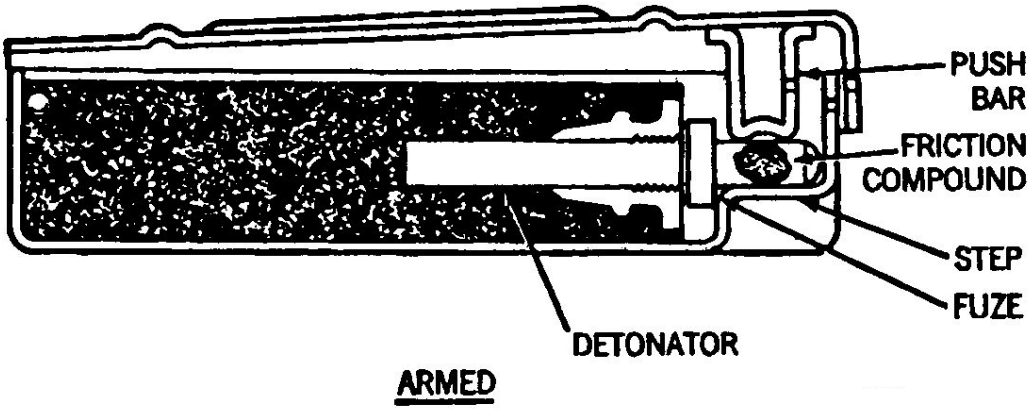		

FWP Ammunition

90

AMMUNITION FAMILY HEM

AMMUNITION TYPE	*Land Mine*
DESIGNATION	*Antipersonnel Blast Mine in a Plastic Body,*
NAME/ASSIGNED MARK (original)	***PMA- 2***
COUNTRY of ORIGIN	*Former Yugoslavia*

PMA- 2	
total weight of mine with detonators and transport safety device [*kg*]	*0.135*
explosive type	*TNT*
weight of explosive [*kg*]	*0.100*
diameter (mm)	*68*
height of body (mm)	*61*
dimension of pressure plate [*mm*]	*Diameter 30*
activation force greater than [*N*]	*50 - 100*
effect of mine	*Up to 2 m*
type of fuze	*UPMAH-2*
type of additional (anti-lift) fuze	

PACKING

Number of rounds in the package		**Weight of full package [*kg*]**	

DESCRIPTION

Antipersonnel blast mine PMA-2 was developed and produced in former Yugoslavia. The mine has plastic body and pressure activated fuze UPMAH-2. The plastic-cased body has a central fuze well for the UPMAH-2. The safety pin holds the fuze plunger in place. The explosive charge is housed in a cylindrical plastic body with a threaded fuze well on the top. The body of the fuze is made from black bakelite with the plunger and prongs made from polystyrene. Pressure on the fuze prongs forces the base of the plunger into a friction-sensitive composition to initiate the detonator and explosive charge.
The mine rarely kills, mostly causes the most difficult wounds (cuts off limbs).

COLOR and MARKING

Body colour:	*Olive*
Text colour:	*Black*

FUZE

Type	**Characteristic**
UPMAH-2	*mechanical, contact, pressure*

SAFETY CONSIDERATION THREAT

Simple removal of mines is very dangerous

NOTICE

DRAWINGS/CUTAWAY/MARKING/STENCILING:		LEGEND
mine PMA-2	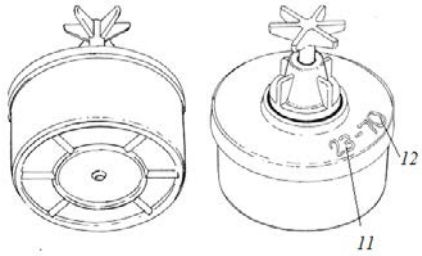 *view from f the base and upper sides on the mine PMA-2*	*1 - body of mine; 2 - explosive charge; 3- detonator; 4 - the top cover of mine; 5 - fuze UPMAH-2; 6 - safety pin 7 - pressure rod spider; 8 – wire ; 9 – striker; 10 – booster charge; 11 - marking the lot of manufacture; 12 – marking the year of manufacture.*
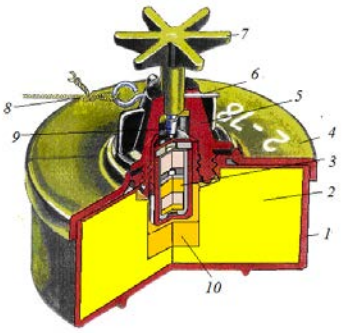 *cross section mine PMA-2 with the fuze UPMAH-2*	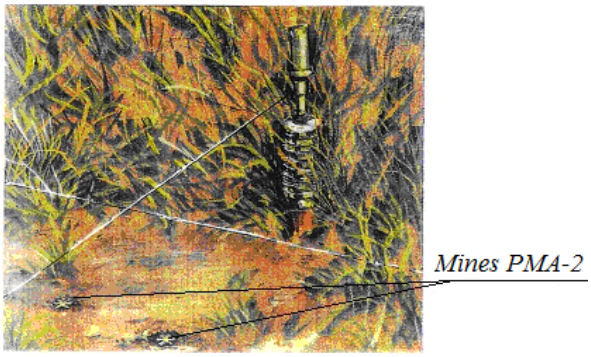 *Setting PMA-2 as min curtain for mines PMR-2*	

FWP Ammunition

91

AMMUNITION FAMILY HEM

AMMUNITION TYPE	*Land Mine*
DESIGNATION	*Anti-personnel Blast Mine in a Plastic Body*
NAME/ASSIGNED MARK (original)	***PMA -3***
COUNTRY of ORIGIN	*former Yugoslavia*

PMA -3	
total weight of mine with detonators and transport safety device [*kg*]	*0. 183*
explosive type	*Tetryl*
weight of explosive [*kg*]	*0.035*
diameter (mm)	*111*
height of body (mm)	*40*
dimension of pressure plate [*mm*]	
activation force greater than [*N*]	*20 - 80*
effect of mine	*Up to 1 m*
type of fuze	*UPMAH -3*
type of additional (anti-lift) fuze	

PACKING

Number of rounds in the package		**Weight of full package [*kg*]**	

DESCRIPTION

The antipersonnel blast mine PMA-3 was developed and produced in former Yugoslavia. The mine bakelite body has two halves, which are held together by a black rubber cover. The base section has a central fuze plug. A spring-loaded safety band is removed during arming. The small removable fuze is held in the top section of the body with the tip located in the base plug. The flexible rubber cover holds the two sections together. Once the arming band has been removed, pressure on the edge of the mine tilts the upper half and shears the end of the fuze, scraping a pin through a friction-sensitive composition to cause initiation.

COLOR and MARKING

Body color:	*Olive*
Text color:	*Black*

FUZE

Type	**Characteristic**
UPMAH -3	*mechanical, contact, pressure,*

SAFETY CONSIDERATION THREAT

Simple removal of mine is very dangerous

NOTICE

DRAWINGS/CUTAWAY/MARKING/STENCILING:		LEGEND
 Mine PMA-3	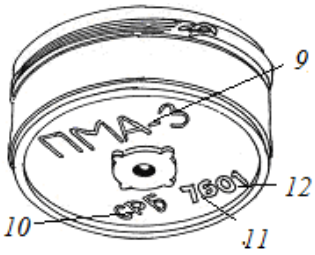 *description bottom mine PMA-3*	*1 - the base part of body; 2 - steel strip; 3- explosive charge; 4 - top rubber cover ; 5 - fuze UPMAH-3; 6 – fuze plug; 7 - upper part of body,; 8 - arming band); 9 – marking the name of the mine; 10 - marking the country of manufacture, 11 - the marking the manufacture lot-; 12 - marking the year of manufacture.*
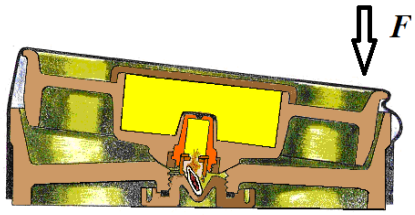 *The principle of operation of mines PMA-3*	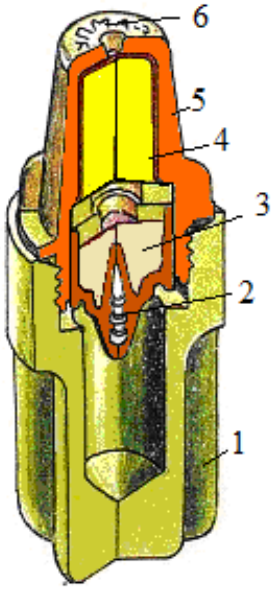 Fuze *UPMAH-3*	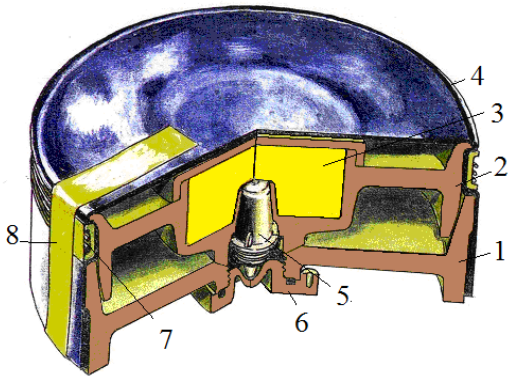
<u>Description fuze UPMAN-3:</u> *1 - body of fuze; 2 – striker;* *3 - initiation composition; 4 - booster ; 5 - cover the body; 6 - marking the fuze*		
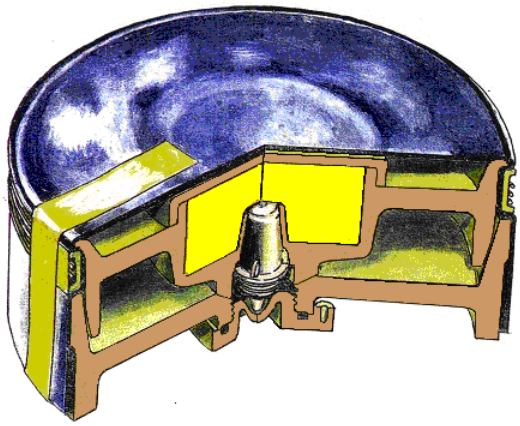 *cross-section mine* **PMA-3**		

FWP Ammunition

92

AMMUNITION FAMILY HEM

AMMUNITION TYPE	*Land Mine*
DESIGNATION	*Antipersonnel Fragmentation Mine in a Metal Body – Stake Mine,*
NAME/ASSIGNED MARK (original)	**PMR-4**
COUNTRY of ORIGIN	*former Yugoslavia*

PMR-4	
total weight of mine with detonators and transport safety device [*kg*]	*2.0*
explosive type	*TNT*
weight of explosive [*kg*]	*0.200*
diameter (mm)	*80*
height of body (mm)	*130*
dimension of pressure plate [*mm*]	
activation force greater than [*N*]	*20 – 40*
effect of mine	*Fragmentation up to 35 m*
type of fuze	*Series MUV,UPM-1; UPM,-2, UMOP- 1*
type of additional (anti-lift) fuze	

PACKING

Number of rounds in the package	*6*	**Weight of full package [*kg*]**	*16.2*

DESCRIPTION

Antipersonnel fragmentation stake mine PMR-4 was produced in the former Yugoslavia (now Serbia and Croatia). Mine has not been put into mass production and use. Small number of mine was made, used on the area of present Croatia (about 1000 copies). Mine PMR-4 has a small body (relative to such mines) with multiple grooves body fragmentation (typically 23 slots) acting on the circumference. For mine PMR-4 are use fuzes UPM-1-2A, UMOP-1 or a series of MUV.

COLOR and MARKING

Body colour:	*Olive*
Text colour:	*Black*

FUZE

Type	**Characteristic**
UPM-1; UPM,-2	*mechanical, contact, pressure*
UMOP- series MUV	*mechanical, contact, pressure*

SAFETY CONSIDERATION THREAT

Simple removal of mine is very dangerous

NOTICE

Mine is dangerous. Destroy on site, do not touch, roll or move. Neutralization similar like in mines PMR-2 or POMZ-2.

DRAWINGS/CUTAWAY/MARKING/STENCILING:		LEGEND
 mine PMR-4		*1 - body of mine;* *2 - explosive charge;* *3 - detonator;* *4 - fuze;* *5 - wooden stake.*
 Mine PMR-4	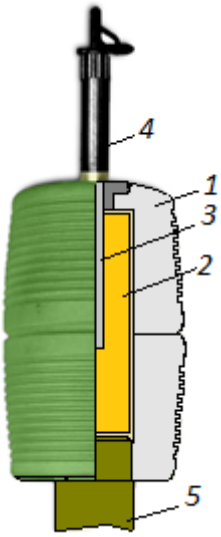 *mine PMR-4 – cross section*	

FWP Ammunition

93

AMMUNITION FAMILY HEM

AMMUNITION TYPE	*Land Mine*
DESIGNATION	*Antipersonnel Fragmentation Mine in a Metal Body – Stake Mine*
NAME/ASSIGNED MARK (original)	**PPMP - 2**
COUNTRY of ORIGIN	*Serbia (former Yugoslavia)*

PPMP - 2	
total weight of mine with detonators and transport safety device [*kg*]	*1.5*
explosive type	*TNT / Plastic explosive*
weight of explosive [*kg*]	*0.15*
diameter (mm)	*68*
height of body (mm)	*140*
dimension of pressure plate [*mm*]	
activation force greater than [*N*]	*50 - 100*
effect of mine	*Fragmentation up to 35 m*
type of fuze	*UPM-1, series MUV,*
type of additional (anti-lift) fuze	

PACKING

Number of rounds in the package		**Weight of full package [*kg*]**	

DESCRIPTION

Antipersonnel fragmentation stake mine PPMP-2 was produced and used during Balkan conflict. Mine is similar to the mine POMZ-2. Mine has cylindrical shape. Metal body has diagonal grooves on the outer side of the wall for better separation during explosion. Mine uses the fuze UPM-1 (copy the fuze RO-1). It is possible to use other fuze types from the family UPM (UPM-2A) or MUV. There are small differences between the mines, depends on producer´s sources and capabilities. Mine has no marking.

COLOR and MARKING

Body colour:	*Olive*
Text colour:	*Black*

FUZE

Type	**Characteristic**
MUV, UPM-1	*mechanical, contact,, pressure*

SAFETY CONSIDERATION THREAT

Simple removal of mine is very dangerous

NOTICE

Mine is dangerous. Mine is to be destroyed on the site. Do not touch, roll or move. Production - Serbia.

DRAWINGS/CUTAWAY/MARKING/STENCILING:		LEGEND
		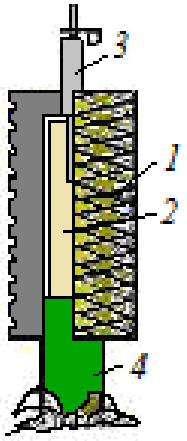 *1 - body of mine; 2 - explosive charge ; 3 - fuze of the series MUV; 4 - stake*

FWP Ammunition

94

AMMUNITION FAMILY HEM

AMMUNITION TYPE	*Land Mine*
DESIGNATION	*Antipersonnel Fragmentation Mine in a Plastic Body - Stake Mine,*
NAME/ASSIGNED MARK (original)	**PMR-U**
COUNTRY of ORIGIN	*Serbia*

UKN (PMR-U)	
total weight of mine with detonators and transport safety device [*kg*]	*1.8 kg*
explosive type	*TNT/plastic explosive*
weight of explosive [*kg*]	*0.1*
diameter (mm)	*70*
height of body (mm)	*112*
dimension of pressure plate [*mm*]	
activation force greater than [*N*]	*50 - 100*
effect of mine	*Fragmentation up to 35 m*
type of fuze	*Series MUV, UMOP- 1, UPM-1*
type of additional (anti-lift) fuze	

PACKING

Number of rounds in the package		**Weight of full package [*kg*]**	

DESCRIPTION

Antipersonnel fragmentation stake mine PMR-U (other name UKN) was produced and used during Balkan conflict. Mine is similar to the mine POMZ-2. Mine has cylindrical shape. Mine uses the fuze UPM-1 (copy the fuze RO-1). It is possible to use other fuze types from the family UPM (UPM-2A) or MUV. There are small differences between the mines, depends on manufacturer´s sources and capabilities. Mine has no marking.

COLOR and MARKING

Body colour:	*Olive*
Text colour:	*Black*

FUZE

Type	**Characteristic**
series MUV, UMOP-1, UPM-1	*mechanical, contact, pressure*

SAFETY CONSIDERATION THREAT

Simple removal of mine is very dangerous

NOTICE

Mine is dangerous. Mine is to be destroyed on the site. Do not touch, roll or move. Production – Serbia. The principle of disarming are the same like for the mines POMZ-2 or PMR-4 or PPM -2.

DRAWINGS/CUTAWAY/MARKING/STENCILING:		LEGEND
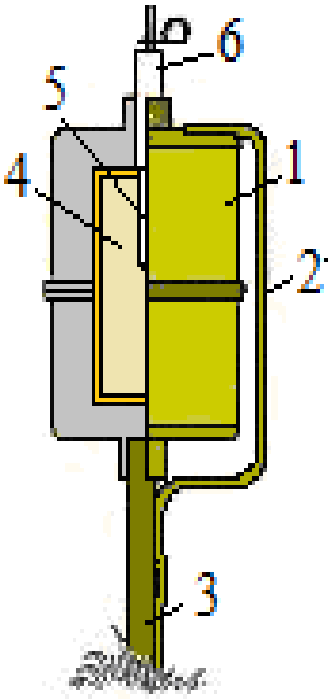	*Fuze MUV* with detonator *MD-2*	*1 - body of mine;* *2 - persistent spring ;* *3 - wooden stake;* *4 - explosive charge;* *5 - detonator;* *6 - fuze from series MUV.*
	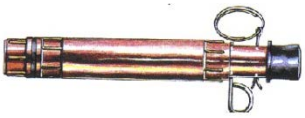 Fuze MUV – 2- bakelite	
	Fuze MUV- 2 M	
	Fuze MUV-4	
	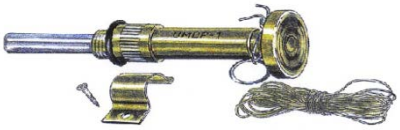 *Fuze UMOP-1*	
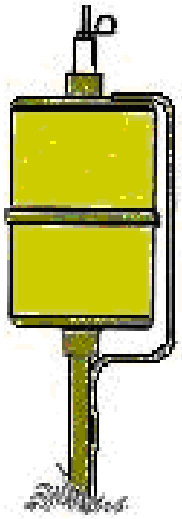 *mine* ***UKN (PMR-U)***		*mine* ***UKN (PMR-U)***

FWP Ammunition

95

AMMUNITION FAMILY HEM

AMMUNITION TYPE	*Land Mine*
DESIGNATION	*Antipersonnel Blast Mine in a Plastic Body*
NAME/ASSIGNED MARK (original)	***No - 4***
COUNTRY of ORIGIN	*Israel, Iran*

No -4	
total weight of mine with detonators and transport safety device [*kg*]	*0.35*
explosive type	*TNT/Comp B*
weight of explosive [*kg*]	*0.2*
length of body (mm)	*135*
width of body (mm)	*65*
height of body (mm)	*55*
dimension of pressure plate [*mm*]	
activation force greater than [*N*]	*60 -80*
effect of mine	*up to 1 m*
type of fuze	*from series MUV or their copy*
type of additional (anti-lift) fuze	

PACKING

Number of rounds in the package		**Weight of full package [*kg*]**	

DESCRIPTION

The No 4 Israel antipersonnel blast mine. Is a plastic cased box mine almost identical to the Iranian No 4 antipersonnel blast mine, which itself, is based on the Russian PMD-6. The two main differences between the Israeli and the Iranian models are in the main explosive filling used (TNT for the Israeli and Comp B for the Iranian) and the fuze mechanism. The fuze for the Israeli No 4 incorporates a lead shear wire arming delay similar to that used on the Russian MUV-2 fuze, whilst the Iranian model omits this feature and is almost identical to the Russian MUV. The striker is retained by the same type of winged pin as used with the MUV, but in addition it has a safety pin. Pressure on the hinged lid pushes out the winged pin releasing the spring loaded striker, which is driven onto the detonator. There are four raised ribs on the lid in a rectangular pattern and the explosive charge is encased in plastic.

COLOR and MARKING

Body colour:	*Olive*
Text colour:	*Black*

FUZE

Type	**Characteristic**
Series MUV or their copy	*mechanical, contact, pressure*

SAFETY CONSIDERATION THREAT

Simple removal of mine is very dangerous

NOTICE

Mine is very dangerous. Mine is to be destroyed on the site. Do not touch, roll or move. Developed version of the Soviet wooden mine PMD-6.

DRAWINGS/CUTAWAY/MARKING/STENCILING:	LEGEND
	1 - hinged lid; 2 – cut hole for the fuze; 3 - lid reinforcing grooves; 4 – base part of the mine; 5 - explosive charge; 6 - fuze from a series MUV; 7 - winged pin.
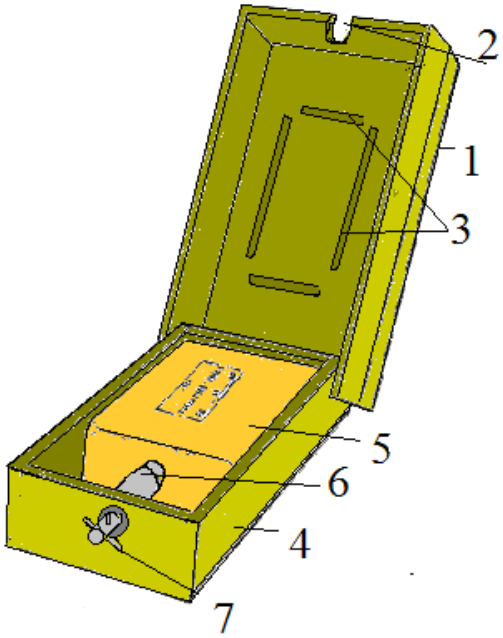	

FWP Ammunition

96

AMMUNITION FAMILY HEM

AMMUNITION TYPE	*Land Mine*
DESIGNATION	*Anti-personnel Fragmentation Mine in a Plastic Body - Directional*
NAME/ASSIGNED MARK (original)	***MRUD (MRUD 1)***
COUNTRY of ORIGIN	*former Yugoslavia*

MRUD (MRUD 1)	
total weight of mine with detonators and transport safety device [*kg*]	*1.7*
explosive type	*Plastic Explosive PE 64*
weight of explosive [*kg*]	*0.900*
diameter (mm)	
length of body (mm)	*230*
width of body (mm)	*89*
height of body (mm)	*to 120*
dimension of pressure plate [*mm*]	
activation force greater than [*N*]	*30 - 50*
effect of mine	*Fragmentation up to 50 m*
type of fuze	*Electrical detonator EK-40-69, or a variety of series MUV*
type of additional (anti-lift) fuze	

PACKING

Number of rounds in the package	*1*	**Weight of full package [*kg*]**	*5*

DESCRIPTION

Directional antipersonnel fragmentation mine MRUD was developed and produced in former Yugoslavia. This is a version of the Soviet mine MON-9. The mine can be initiated either electrically or non-electrically. The rectangular mine body is supported by two pairs of steel folding scissor legs. On the top of the mine are two threaded fuze wells. These two fuze wells will accommodate a variety of standard pull fuzes (e.g. MUV series) and detonator assemblies. Initiation is normally by electrical command. The plastic body encloses a matrix of 5 mm steel ball bearings set in plastic (about 650 pcs). These fragments are backed by plastic explosive. Modern versions have a smooth front face, while older models had ribs across the face.

COLOR and MARKING

Body color:	*Olive*
Text color:	*Black*

FUZE

Type	**Characteristic**
EK-40-69	*electric detonator*
MUV	*mechanical, contact, pressure*

SAFETY CONSIDERATION THREAT

Mine is very sensitive. Simple removal of mine is very dangerous

NOTICE

Mine is very dangerous, to be destroyed on the site. Do not touch, roll or move.

DRAWINGS/CUTAWAY/MARKING/STENCILING:		LEGEND
 mine MRUD - drawing		*1 - body of mine; 2 - explosive charge; 3 - detonator; 4 - electric detonator EK-40-69; 5 - balls of steel - fragments ; 6 – place for sights; 7 - fuze well ; 8 - scissors legs; 9 - RI (inductor current); 10 - the battery compartment; 11 – electric wire length 30 m*
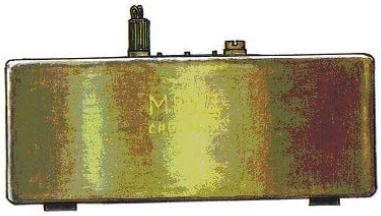 **MINE MRUD -1**	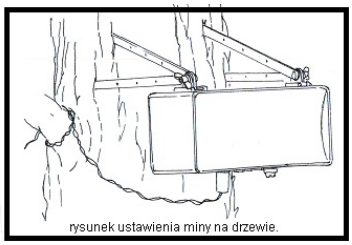 *mine MRUD in combat position on a tree - drawing* *electric detonator EK-40-69* 	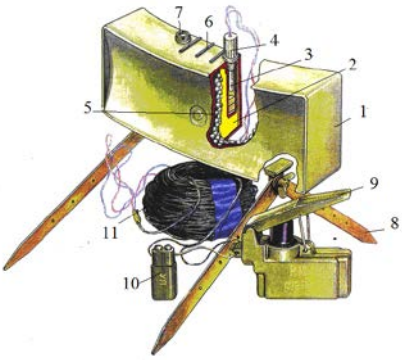 *cross-section of mine **MRUD-1***
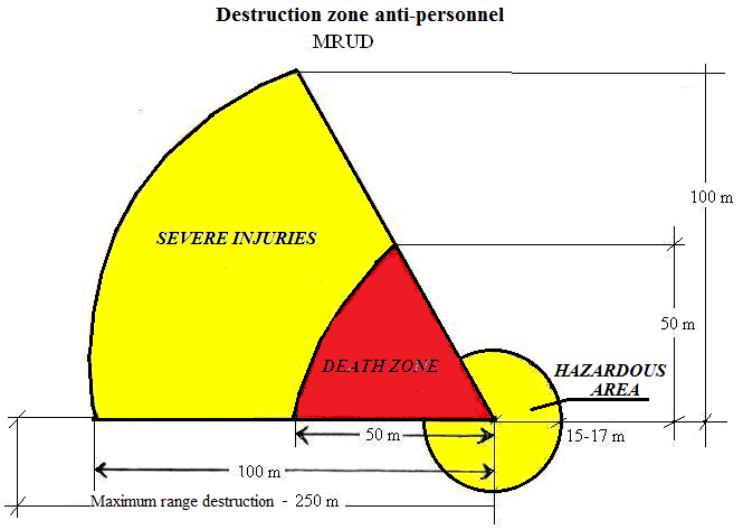 		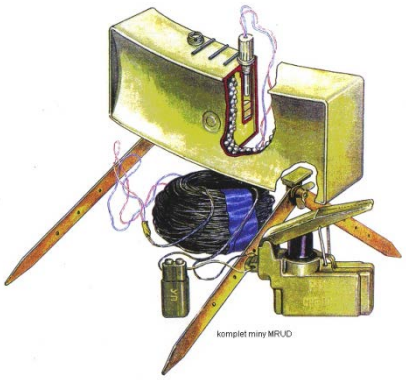 *Set of mine MRUD -1*

FWP Ammunition

97

AMMUNITION FAMILY HEM

AMMUNITION TYPE	*Land Mine*
DESIGNATION	*Antipersonnel Fragmentation Mine in a Metal Body – Bounding Mine*
NAME/ASSIGNED MARK (original)	***DM-31***
COUNTRY of ORIGIN	Germany

DM-31	
total weight of mine with detonators and transport safety device [*kg*]	*4.1*
explosive type	*TNT*
weight of explosive [*kg*]	*0,530*
diameter (mm)	*102*
height of body (mm)	*135*
activation force greater than [*N*]	*50 - 100*
effect of mine	*Fragmentation up to 25 m*
type of central fuze	*DM-56,*
type of additional (anti-lift) fuze	

PACKING

Number of rounds in the package	*6*	**Weight of full package [*kg*]**	*30*

DESCRIPTION

Antipersonnel fragmentation bounding mine DM-31 was developed and produced in Germany. The mine has a cylindrical, steel body and is designed to wound or kill by fragmentation. The DM-31 consists of a fuze, smooth outer steel case, pyrotechnic delay and expelling charge in the bottom; an inner case which contains a 350 g explosive charge and about 1.18 kg fragments. DM-56 pressure/pull fuze is screwed into a fuze well what is off-centre on top of the mine. The DM-31 can be placed by hand or with a special emplacing tool and it can have two or three tripwires attached to the DM-56 mechanical fuze. It can be defeated by blast overpressure from explosive breaching systems such as the Giant Viper and MICLIC. The DM-41 is a developmental upgrade of the DM-31, which uses the same mine body, but has a new fuze assembly. A pressure of 50 N or 100 N of pull on a tripwire overcome the resistance of the safety spring on the DM56 combination fuze and allows a spring loaded striker to impact a percussion cap. This initiates a two second pyrotechnic delay before firing the expelling charge. The expelling charge propels the inner case upward to a height of 1.2 meters. At this point a wire attached to the still-buried outer case pulls a pin on the bottom of the inner casing and releases the locking balls from a spring loaded striker. The striker snaps up and strikes the percussion cap/detonator which explodes and initiates the explosive charge.

COLOR and MARKING

Body color:	*Olive with yellow spots on the outer body of mine.*
Text color:	*Black*

FUZE

Type	**Characteristic**
DM-56	*mechanical, contact, tension-pressure*
Electrical detonator	

SAFETY CONSIDERATION THREAT

Mine is very sensitive. Simple removal of mines is very dangerous

NOTICE

Mine is very dangerous, to be destroyed on the site. Do not touch, roll or move.

DRAWINGS/CUTAWAY/MARKING/STENCILING:			LEGEND
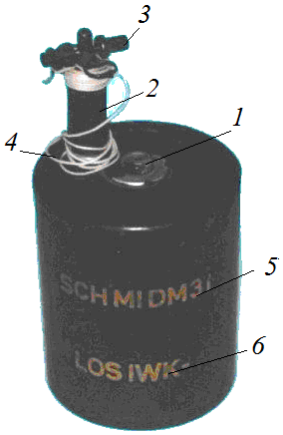 *mine DM-31*	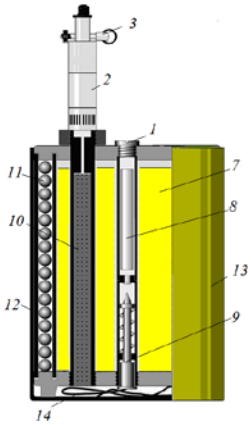 *Cross-section picture of the mine-DM-31.*	*Figure showing the description of the mines DM-31*	*1 – detonator well, 2 – fuze DM-56 3 – safety pin; 4 - string (extraction); 5 - index - name of the mine; 6 - index of the explosive; 7 - explosive charge ; 8- detonator; 9 – striker 10 – propellant expelling system; 11 - fragments ; 12 – the inner body of the mine ; 13 - the outer body of the mine ; 14 - string; 15 - marking the manufacturer and lot of manufacture* *fuse Z.Z. 35*
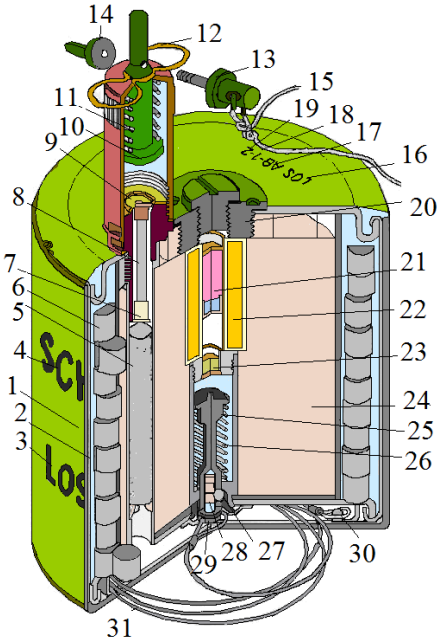	***Description section mines*** *1 - external wall of mine; 2 - inner mine body ; 3 – marking the manufacturer and lot of manufacture; 4 – marking the name of the mine 5 - propellant system (gunpowder); 6 - fragments - steel rollers; 7 - igniter propellant charge; 8 - path Powder Tower; 9 – initiator incendiary; 10 – striking pin; 11 - spring; 12 - Transport security (pin); 13 – Cotter pin; 14 - pin plug; 15 - extraction; 16 – marking the manufacturer; 17 – marking the manufacture lot; 18 – marking the version of the mine; 19 – marking the variations of mine; 20 plug sockets detonator; 21 - initiating explosive device; 22 – booster charge, 23 - detonator; 24 - explosive charge; 25 - striker; 26 - spring; 27 - steel ball; 28 - security mechanism spire; 29 - hook links (trigger needle); 30 hook links in the body of the outer mines; 31 - stranded drain mines.*		

FWP Ammunition

98

AMMUNITION FAMILY HEM

AMMUNITION TYPE	*Land Mine*
DESIGNATION	*Antipersonnel Blast Mine in a Plastic Body*
NAME/ASSIGNED MARK (original)	**DM-11 (DM-11 AP)**
COUNTRY of ORIGIN	*Germany*

DM-11 (DM-11 AP)	
total weight of mine with detonators and transport safety device [*kg*]	*0.230*
explosive type	*TNT*
weight of explosive [*kg*]	*0.121*
diameter (mm)	*82*
height of body (mm)	*34*
dimension of pressure plate [*mm*]	
activation force greater than [*N*]	*50 - 100*
effect of mine	*up to 1 m*
type of fuze	*Integrated with the mine*
type of additional (anti-lift) fuze	

PACKING

Number of rounds in the package		**Weight of full package [*kg*]**	

DESCRIPTION

Antipersonnel blast mine DM-11 was produced in Germany as a licensed copy of the Swedish LI-11, a pressure-operated antipersonnel blast mine with a very low metallic content. The mine body has two halves, the convex base of the upper section sitting in the dished lower section. The upper half has a central threaded fuze well that accepts the DM-3 detonator assembly. Around the fuze well is the explosive charge and below this, in the inverted dome, is a Belleville spring with a small steel striker in the centre. The protruding base of the striker holder sits in a small hollow at the base of the dished lower section, which is also filled with explosive. The transit plug is fitted into the fuze well during shipping, is extended in order to prevent the Belleville spring from inverting. The two halves of the mine are joined by a rubber cover and secured during transit by a tight-fitting metal safety sleeve. DM-11 is waterproof, normally coloured dark olive green. Marking is embossed on the base of the mine, the year of manufacture is normally stencilled by yellow.

COLOR and MARKING

Body color:	*Olive*
Text color:	*Black*

FUZE

Type	**Characteristic**
Integrated with the mine	*Pressure type of fuze, integrated with the mine.*

SAFETY CONSIDERATION THREAT

Simple removal of mine is very dangerous

NOTICE

Mine is very dangerous. Do not touch, slide or move.

DRAWINGS/CUTAWAY/MARKING/STENCILING:		LEGEND
 mine DM-11	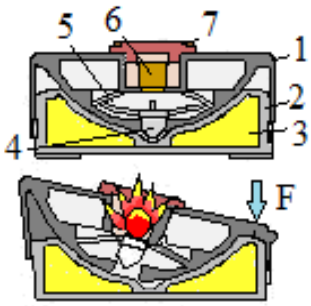 *Principle of mine operation DM-11*	*1 – cover the top (compression); 2 - body of mine; 3 - explosive charge; 4 - igniter mechanism; 5 - flat spring (dinghy); 6 - detonator (initiating charge); 7 - plug detonator well plug.*
 mine DM-P-11 transport lid.	 **MINE DM-11** *1-mine DM-11; 2 – detonator well plug; 3 - cover transport;*	 ***Description of bottom mine DM-11*** *1 – marking –the name of mine; 2 - marking the explosive charge; 3 - marking the manufacturer and the lot of mine manufacture*

FWP Ammunition

99

AMMUNITION FAMILY HEM

AMMUNITION TYPE	*Land Mine*
DESIGNATION	*Antipersonnel Blast Mine in a Plastic Body.*
NAME/ASSIGNED MARK (original)	**GYATA - 64**
COUNTRY of ORIGIN	*Hungary*

GYATA – 64

total weight of mine with detonators and transport safety device [*kg*]	*0,520*
explosive type	*TNT*
weight of explosive [*kg*]	*0.200*
diameter (mm)	*106*
height of body (mm)	*61*
dimension of pressure plate [*mm*]	
activation force greater than [*N*]	*50 - 150*
effect of mine	*Up to 1 m*
type of fuze	*Integrated with the mine*
type of additional (anti-lift) fuze	

PACKING

Number of rounds in the package		**Weight of full package [*kg*]**	

DESCRIPTION

Antipersonnel blast mine GYATA-64 was developed and produced in Hungary. The construction, design, principle of operation resembles to the Russian PMN mine. The body incorporates a transverse fuze, with a large protruding cap on each side. One houses the striker mechanism and arming system while the other is a plug retaining the removable detonator. The main body is made from thick bakelite with a rubber cap. The fuze mechanism has a large steel striker and spring. The fuze incorporates a lead-shear arming delay, after which the transverse striker is retained by the central plunger. GYATA 64 mines are found and used mainly in African countries - Mozambique, Angola and Lebanon. Disarming of GYATA 64 is the same as PMN mine.

COLOR and MARKING

Body color:	*Olive (black rubber top cover. possibility of meeting minutes with body-colored bakelite-brown).*
Text color:	*Black*

FUZE

Type	**Characteristic**
Integrated with the mine	*mechanical, contact, pressure*

SAFETY CONSIDERATION THREAT

Mine is very sensitive. Simple removal of mine is very dangerous

NOTICE

Mine is a very dangerous, to be destroyed on the site. Do not touch, roll or move.

DRAWINGS/CUTAWAY/MARKING/STENCILING:		LEGEND
 *mine **GYATA - 64***	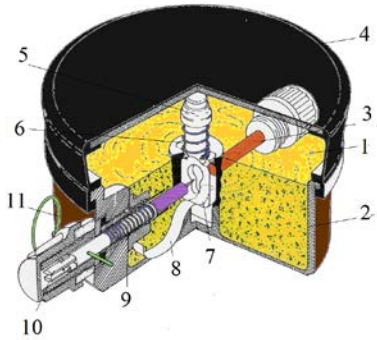	*1 - explosive charge; 2 - body of mine; 3 - detonator; 4 - pressure cover - rubber; 5 - pressure plunger; 6 – plunger spring; 7 - detonator mechanism; 8 - flat spring; 9 – striker spring; 10 - fuze; 11 - transport cotter pin; 12 - nut socket detonator; 13 - marking the name of the mine; 14 - marking-the manufacturer of mine ; 15 - marking the lot of manufacture; 16 – marking the year of manufacture.*
 *mine **GYATA - 64***	 *marking of mine* **GYATA-64**	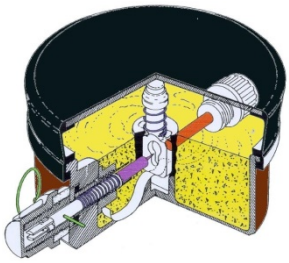 *mine section **GYATA-64***

FWP Ammunition

100

AMMUNITION FAMILY HEM

AMMUNITION TYPE	*Land mine*
DESIGNATION	*Special Blast Mine in a Bakelite Body – Limpet Mine*
NAME/ASSIGNED MARK (original)	**SPM**
COUNTRY of ORIGIN	*Former USSR*

SPM

total weight of mine with detonators and transport safety device [*kg*]	*3*
explosive type	*TNT*
weight of explosive [*kg*]	*1*
height of body (mm)	*75*
length of body (mm)	*280*
dimension of pressure plate [*mm*]	
activation force greater than (N)	
effect of mine	*Penetration of 30 mm RHA*
type of central fuze	*VZD-1M, VZD-20 M*
type of additional (anti-lift) fuze	

PACKING

Number of rounds in the package		**Weight of full package [*kg*]**	

DESCRIPTION

Special blast mine SPM was developed and produced in former USSR. Mine has a semi-cylindrical bakelite body filled with TNT. Mine is attached to the objects with four magnets. At one end of mine is fuze well for time delay fuze, on the other end is a textile handle. The fuze utilizes lead delay strips (eight), which are cut by a spring loaded wire. The delay time is only approximate and temperature dependent. SPM is designed to destroy ships, fuel tanks, etc. Mine is used mainly in Navy and special units.

COLOR and MARKING

Body colour:	*Gray (color aluminum)*
Text colour:	*Black*

FUZE

Type	Characteristic
VZD-1M, VZD-20M3	*Mechanical, timing. Timing time is determined by the type of lead´s plate.*

SAFETY CONSIDERATION THREAT

Mine is very sensitive. Used mines are dangerous. Difficult to disarmament (almost impossible).

NOTICE

Similar structures: Poland mine MPM; Chinese Type 158; Korean version of the mines TYPE 158; English mine Clam Limpet MK. III

DRAWINGS/CUTAWAY/MARKING/STENCILING:	LEGEND
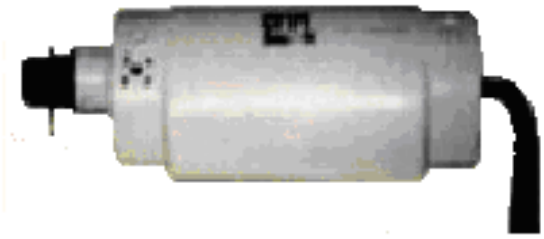 *mine **SPM***	*1 - base plate of mine; 2 - magnets; 3 - inner body of the mine; 4 - explosive charge; 5 – booster; 6 – incendiary initiator; 7 - booster charge; 8 - additional detonator well; 9 – striker; 10 – striker springe; 11 - fuze timer (lead); 12 - spring lever fuze; 13 – safety pin; 15 - fuze mechanism WZD-3; 16 - carrying handle; 17 - detonator MD-2; 18 - cardboard (fill); 19 - the main body.*
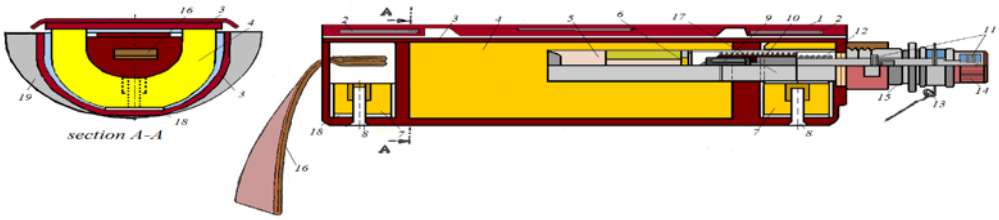 *section of mine SPM*	
 *mine **SPM***	

FWP Ammunition

101

AMMUNITION FAMILY HEM

AMMUNITION TYPE	*Land mine*
DESIGNATION	*Special Blast Mine in a Wooden Body*
NAME/ASSIGNED MARK (original)	**MZD -60**
COUNTRY of ORIGIN	*former USSR;*

MZD -60	
total weight of mine with detonators and transport safety device [*kg*]	*various*
explosive type	*various*
weight of explosive [*kg*]	*various*
height of body (mm)	*various*
length of body (mm)	*various*
width of body (mm)	*various*
dimension of pressure plate [*mm*]	
activation force greater than [*N*	
effect of mine	*Depending on the type of explosive and quantities*
type of fuze	*MZD- 60;*
type of additional (anti-lift) fuze	

PACKING

Number of rounds in the crate		**Weight of full crate [*kg*]**	

DESCRIPTION

Special blast mine MZD-60 was developed and produced in former USSR. Mine is designed as a diversionary trap mine. Construction - wooden box filled with explosive material. As a detonator was used mostly MZD-60. Production was mainly in Russia (former USSR), but also in the former eastern countries. Mine has clockwork timing fuze.

COLOR and MARKING

Body colour:	*green*
Text colour:	*Black*

FUZE

Type	**Characteristic**
MZD- 60	*Timing fuze , clockwork; detonator MD-2*

SAFETY CONSIDERATION THREAT

Simple removal of mine is very dangerous. The ability to disarm only by a person familiar with the construction of the clock mechanism.

NOTICE

Can be used with clockwork detonators, among others, MZD-10; MZD-15;

DRAWINGS/CUTAWAY/MARKING/STENCILING:	LEGEND
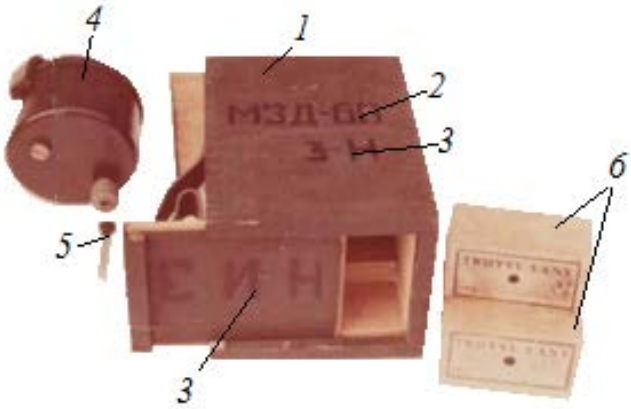	***description of mine MZD-60*** *1 - body of mine - a wooden box; 2 - index - the type of mines; 3 - index - the capacity of the box - 3 kg explosive charge; 4 – timing fuze MZD-60; 5 - detonator MD-5M.* ***description of fuse mechanism MZD-60*** *1 - body; 2 - the cover; 3 - buckle; 4 – clockwork mechanism 5 - Screw Clamp; 6 - Booster socket; 7 - spring; 8 - striker; 9 - screw mounting; 10 - graduation daily; 11 – striker release system; 12 - contactor; 13 - hand of the clock - the contactor.*

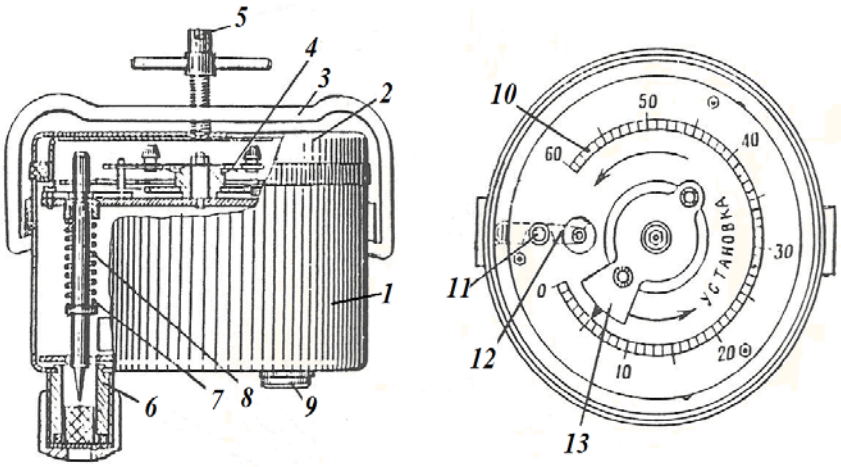

Clockwork fuze MZD-60-sectional

mine MZD-60

e

FWP Ammunition

102

v AMMUNITION FAMILY HEM

AMMUNITION TYPE	*Land Mine*
DESIGNATION	*Antipersonnel mine fuze system*
NAME/ASSIGNED MARK (original)	**VP13 („Mother") Volturia**
COUNTRY of ORIGIN	*Former USSR*

VP13 („Mother") Volturia	
total weight of mine with detonators and transport safety device [*kg*]	*4.2*
explosive type	*depends on type of used mine*
weight of explosive [*kg*]	
diameter (mm)	*110*
height of body (mm)	*250*
dimension of pressure plate [*mm*]	
activation force greater than [*N*]	*Seismic up to 20 m*
effect of mine	*various, depends on the type of mine.*
type of fuze	***MUV-2; MUV-4;***
type of additional (anti-lift) fuze	

PACKING

Number of rounds in the package		**Weight of full package [*kg*]**	

DESCRIPTION

Antipersonnel mine fuze system VP-13 was developed and produced in former USSR. The VP 13 is initiation system for AP mines. VP-13 is essentially similar to VP-12. Both systems employ one or more geophones (seismic sensors) to detect personnel on foot up to 20 meters away. The lid includes a complex series of sockets and protruding wires and is attached to the main body by three steel clips. The geophone has a pointed sensor on a cylinder body with a wide cap, and three attached wires. Powered by 6 x 1.5 V batteries these systems can be used with the following Soviet mines: MON 50, 100 & 200; OZM 3,4,72 & 160 and other former Warsaw Pact mines with the proper adaptor thread, e. g. PP-Mi Sr. System VP-13 has a fuze SV-20 P to receive the vibrations of tectonic (1 pc) - receiving vibrations from a distance of about 75 m. System is designated to control five antipersonnel mines based on identification and the location of targets. The last (sixth) connection is designated for external explosive charge or for selfdestruction.

COLOR and MARKING

Body colour:	*green*
Text colour:	*Black*

FUZE

Type	**Characteristic**

SAFETY CONSIDERATION THREAT

Simple removal of mines with this fuze system is very dangerous. Difficult to disarm. Apply the principle of "shooting" VS-13.
Warning: *Can be fitted with anti-handling devices and selfdestruction capability*

NOTICE

Antipersonnel mine fuze system is very sensitive. Exact figures are difficult to obtain. Used in the Middle East, during the Balkan conflicts and in Afghanistan.

DRAWINGS/CUTAWAY/MARKING/STENCILING:		LEGEND
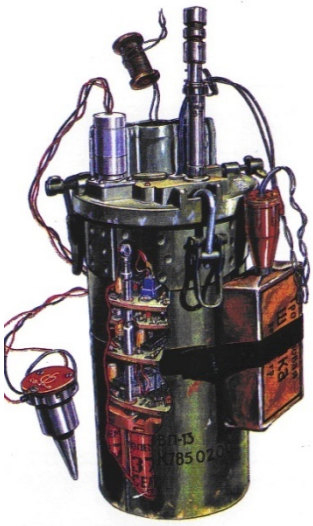 section VP 13	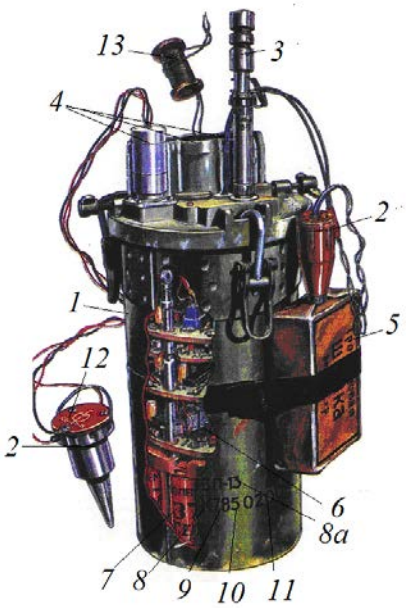	*1 - body. 2 - Electric fuze MN; 3 - antenna; 4 - Connection to electric detonators; 5 - explosive charge 200 gr. TNT; 6 - electronics; 7 - power source (batteries); 8a-marking the name of the mine; 8 - marking the country of the manufacture; 9 - marking the number of mine manufacture; 10-marking the lot of manufacture; 11 – marking the year of mine manufacture; 12 – marking the name of the fuze; 13 - electrical wire; 14 - marking serial number of mine; 15 - connection sockets; 16 - Body detonator; 17 - covers the body; 18 - electric conductors; 19 - initiator; 20 striker; 21 - primer ignition; 22 - Powder for delay; 23 - detonator; 24 - Ignition mass.*
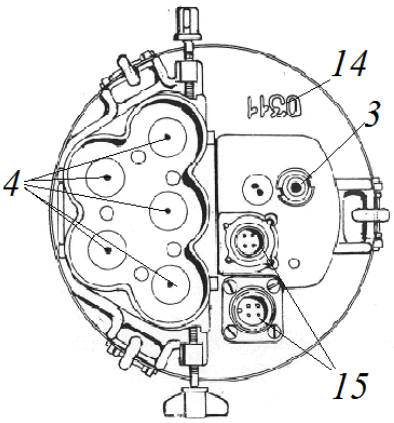 view from the top VP -13	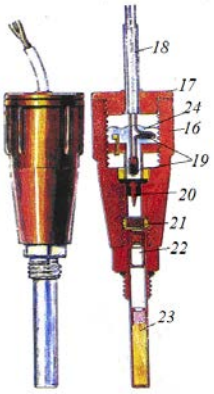 Electric fuzes NM with the detonator MD-5M	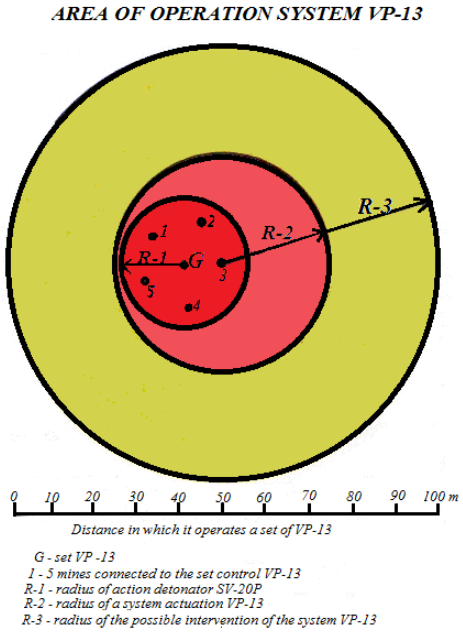

FWP Ammunition

103

AMMUNITION FAMILY HEM

AMMUNITION TYPE	*Land Mine*
DESIGNATION	*Special Blast Limpet Mine in a Metal Body*
NAME/ASSIGNED MARK (original)	***BPM / (BPM-2 "TURTLE")***
COUNTRY of ORIGIN	*Former USSR*

BPM /BPM-2 "TURTLE"

	BPM	***BPM-2 "TURTLE"***
total weight of mine with detonators and transport safety device [*kg*]	*6.8*	*6.6*
explosive type	*TNT*	*TNT*
weight of explosive [*kg*]	*3*	*3*
height of body (mm)	*180*	*115*
diameter (mm) min./max	*/300*	*255 /305*
dimension of pressure plate [*mm*]		
activation force greater than [N]		
effect of mine	*Up to 20 m*	*Up to 20 m*
type of fuze	*1 integrated fuze for tenure; 2 fuzes type VZM-3*	
type of additional (anti-lift) fuze		

PACKING

Number of rounds in the package		**Weight of full package [*kg*]**	

DESCRIPTION

Special limpet blast mine BPM was developed and produced in former USSR. The mine is hemispherical with two rows of magnets on the bottom. The mine is simply a dome - shaped metal (aluminum) case filled with TNT. The BPM has three fuzes. Two main delay fuzes and one anti-disturbance fuze. The delay fuzes utilize lead delay strips (different thickness), which are cut by spring loaded wire. The cutting of the lead strip allows the striker assembly to initiate the detonator. The BPM-2 is improvement of the BPM mine with 11 magnets mounted on its base. The striker is retained by two lead strips. Arming occurs after 5 to 20 minutes and detonation occurs between 5 minutes and 832 hours. An antiremoval device incorporated in the mine will detonate if it is lifted more than 10 mm from the target surface.

COLOR and MARKING

Body colour:	*grey*
Text colour:	*Black*

FUZE

Type	**Characteristic**
VZM-3 *integrated*	*Timer, the timing of the fuze is determined by the types and number of lead plates. Detonator MD-2 is irremoxable.*

SAFETY CONSIDERATION THREAT

Simple removal of mine is very dangerous. Armed - particularly dangerous. Destroy on site. Inability to disarm.

NOTICE

The difference between the face BPM and the face BPM-2 is small, mainly dimensions. Both mines are commonly called "Turtle".

DRAWINGS/CUTAWAY/MARKING/STENCILING:	LEGEND
	1 - body of mines; *2 – base fuze;* *3 - magnets;* *4 - Response time setting knob mines;* *5 - additional fuze;* *6 - marking - description of mines (type of mine);* *7 - cotter pin;* *8 - the main fuze*
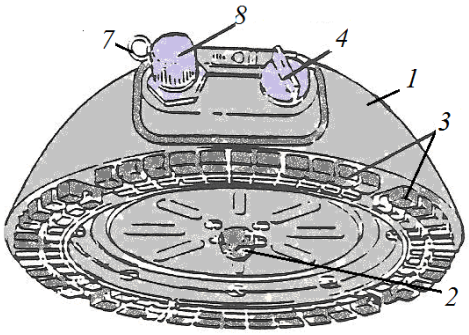 *drawing of mine BPM (PBM-2) view 1*	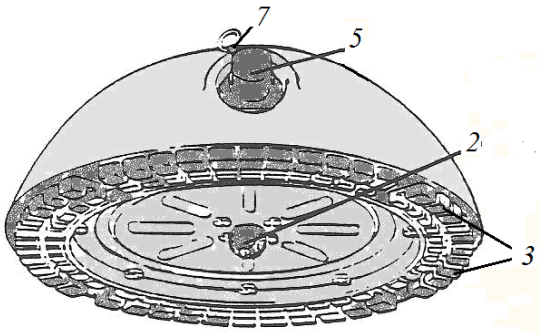 *Drawing of mine BPM (PBM-2) view 2*

FWP Ammunition

104

AMMUNITION FAMILY HEM

AMMUNITION TYPE	*Land Mine*
DESIGNATION	*Special Blast Mine in a Plastic Body*
NAME/ASSIGNED MARK (original)	**ML-7 (МЛ-7).**
COUNTRY of ORIGIN	*Former USSR*

ML-7 (МЛ-7).	
total weight of mine with detonators and transport safety device [*kg*]	*0.100*
explosive type	*PVV -5 and Tetryl*
weight of explosive [*kg*]	*0.040*
height of body (mm)	*30*
length of body (mm)	*72*
width of body (mm)	*69*
dimension of pressure plate [*mm*]	*55 x 55*
activation force (greater than) [*N*]	*3*
effect of mine	
type of fuze	*mechanical, integral part of mine,*
type of additional (anti-lift) fuze	

PACKING

Number of rounds in the package	*72*	**Weight of full package [*kg*]**	*24*

DESCRIPTION

Special blast mine ML-7 was developed and produced (since 1984) in former USSR. Mine is designed for booby trap and like antilift mine for other types of mine. Mine consists of plastic body, integral fuze VGMS-1 with remote arming device, pressure plate (5.5 x 5.5 cm), two explosive charges of plastic explosive PVV-5 and two booster charges (tetryl). The arming time is 45 s – 20 min.

COLOR and MARKING

Body colour:	*Black, green, gray.*
Text colour:	*Black (white)*

FUZE

Type	**Characteristic**
VGMS-1	*Integral part. mechanical, contact, pressure*

SAFETY CONSIDERATION THREAT

Simple removal of mine is very dangerous. Difficult to disarm (almost impossible). Armed - particularly dangerous. Destroy on site.

NOTICE

Similar in construction and appearance as mine ML-7 are mines production of the United States, the Chinese, Turkey and Palestine. Simple design. Irremovable.

DRAWINGS/CUTAWAY/MARKING/STENCILING:	LEGEND
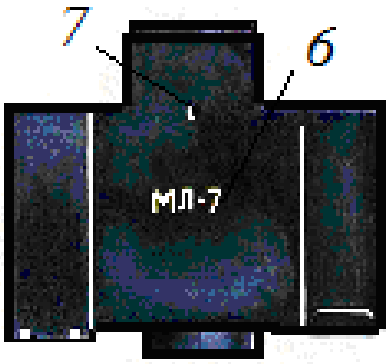	*1 - fuze* *2 - source ;* *3 - remote arming device* *4 - cap of remote arming device;* *5 - explosive charges;* *6 – marking - name of the mine;* *7 - marking the top cover (removable).* 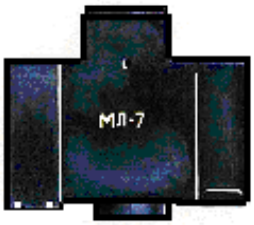
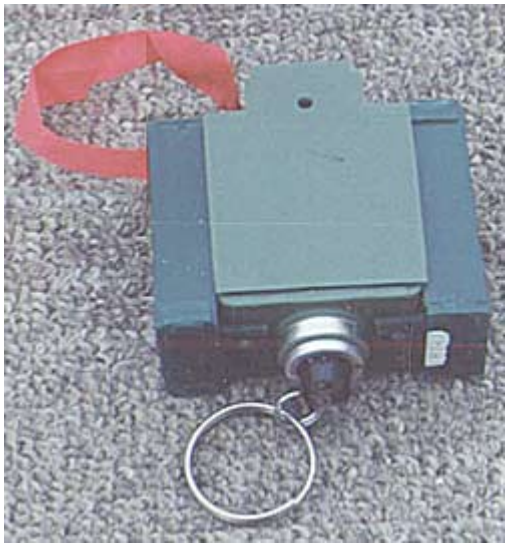	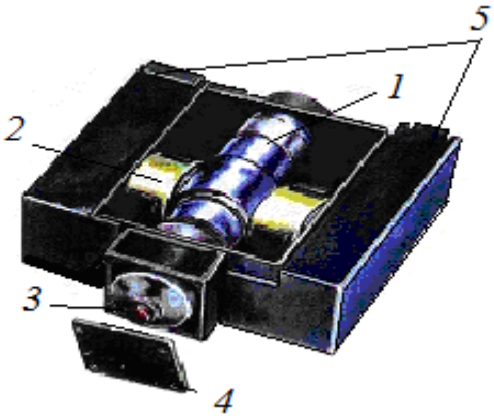

FWP Ammunition

105

AMMUNITION FAMILY HEM

AMMUNITION TYPE	*Land Mine*
DESIGNATION	*Special Blast Mine in a Plastic Body*
NAME/ASSIGNED MARK (original)	**VP-11 (ВП -11)**
COUNTRY of ORIGIN	*Former USSR*

VP-11 (ВП -11)	
total weight of mine with detonators and transport safety device [*kg*]	*0.9*
explosive type	*PMW-2 or Semtex*
weight of explosive [*kg*]	*0.40*
height of body (mm)	*28*
length of body s (mm)	*75*
width of body (mm)	*65*
dimension of pressure plate [*mm*]	
activation force (greater than) [*N*]	*Laser or infrared element of tenure.*
effect of mine	
type of fuze	*AGM-S or PFM-18 with an infrared sensor*
type of additional (anti-lift) fuze	

PACKING

Number of rounds in the package		**Weight of full package[*kg*]**	

DESCRIPTION

Special antipersonnel blast mine VP-11 (ВП -11) was developed and produced in former USSR. The mine is a developed version of mine ML-7 (МЛ-7). The difference is in the position of a laser, and slight changes are in the structure. The body of mine is a thermosetting plastic. Fuze is indelible AGM-S or PFM-18. Load PMW-2 or SEMTEX. Activation of the fuze is by interrupting the thread of infrared light (laser). It has magnets in the base to allow attach it onto metal surface. The mine is used for diversion or sabotage . The mine is designed for special forces.

COLOR and MARKING

Body colour:	*Black, green, gray.*
Text colour:	*Black (white)*

FUZE

Type	**Characteristic**
AGM-S	*laser*
PFM-18	*with an infrared sensor*

SAFETY CONSIDERATION THREAT

Simple removal of mine is very dangerous. Difficult to disarm (almost impossible). Armed - particularly dangerous. Destroy on site.

NOTICE

Similar in construction and appearance are versions of mines ML-7 or similar to mines production of the United States, the Chinese, Turkey and Palestine. Simple design. Irremovable.

DRAWINGS/CUTAWAY/MARKING/STENCILING:		LEGEND
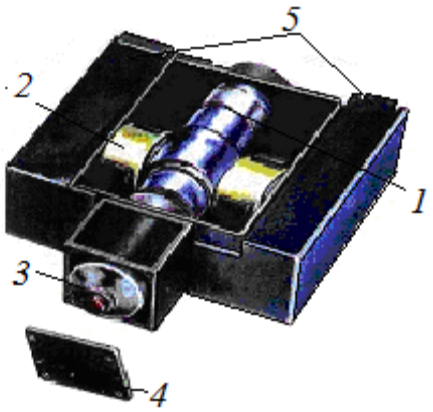		*1- fuze mechanism AGM-S (PFM-18);* *2 - power;* *3 - laser;* *4 - Laser cap;* *5 - slots explosive;* *6 - index - name of the mines;* *7 - index - marking the top cover (removable).*
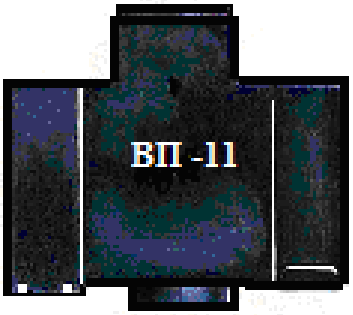	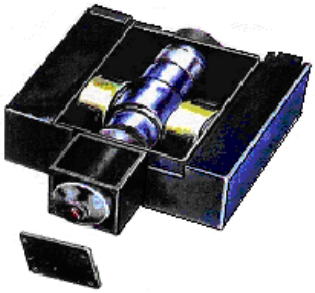	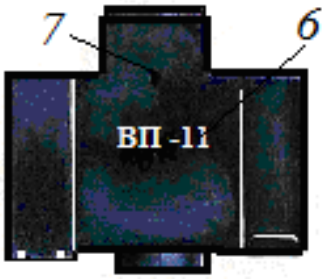

FWP Ammunition

106

AMMUNITION FAMILY HEM

AMMUNITION TYPE	*Land Mine*
DESIGNATION	*Special Blast Mine in a Metal Body*
NAME/ASSIGNED MARK (original)	**MS-4**
COUNTRY of ORIGIN	*Former USSR*

MS-4 (MC-4).

total weight of mine with detonators and transport safety device [*kg*]	*0.48*
explosive type	*TNT*
weight of explosive [*kg*]	*0.117*
Height of body (mm)	*31*
Length of body (mm)	*159*
Width of body (mm)	*92*
dimension of pressure plate [*mm*]	
activation force (greater than) [*N*]	
effect of mine	
type of fuze	*Integrated*
type of additional (anti-lift) fuze	

PACKING

Number of rounds in the package		**Weight of full package [*kg*]**	

DESCRIPTION

Special blast mine MS-4 was developed and produced in former USSR. The mine has an electronic fuze sensitive for vibration and mechanical fuze sensitive to change the location of the mine. Mine has detonator with intermediate primer A TAT-8M. Mine is intended to cover minefields (anti-personnel and anti-mined objects). However, due to the very small size (15.9 x 9.2 x 3.1 cm) and very small explosive charge (117 gr.) the mine may also be used as a booster for the main explosive charge and antilifft device for the other mines or weapons.

COLOR and MARKING

Body colour:	*Black, green, gray.*
Text colour:	*Black (white)*

FUZE

Type	**Characteristic**
fuze	*mechanical, contact, pressure*
vibration sensor	*electronic, non contact,*
a timer	*operates from 15 min to 360 hours, depending on the weather conditions. The accuracy depends on the ambient temperature*

SAFETY CONSIDERATION THREAT

Mine is very sensitive. Simple removal of mine is very dangerous. Destroy on the site.

NOTICE

Used in the territory of the former Yugoslavia during the Balkan conflicts.

DRAWINGS/CUTAWAY/MARKING/STENCILING:	LEGEND
 mine **MS-4**	*1 - body; 2 - explosive charge; 3 - fuze - vibration sensor; 4 - fuze - location sensor; 5 - tape - handle pin vibration sensor; 6 - tape - handle security location sensor; 7 - signal convertor; 8 - 3V battery; 9 - fuze - timer; 10 - detonator; 11 - Cover the container; 12 - cover latch; 13 - marking the name of the mine; 14 - marking the manufacturer, lot and year of manufacture.*
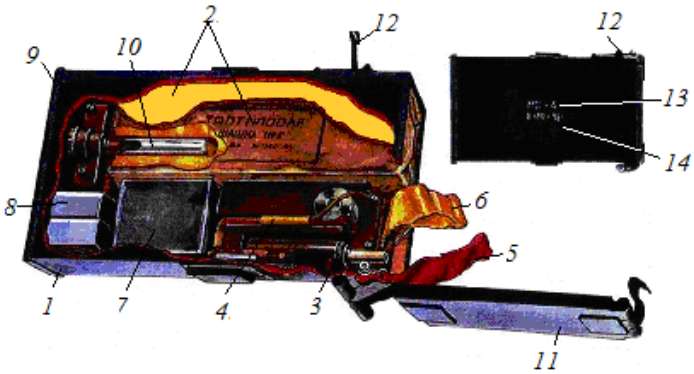 section of mine **MS-4**	
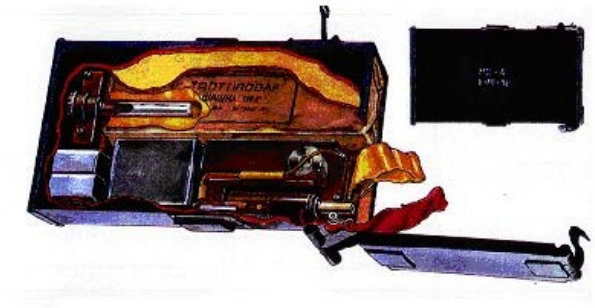 section of mine **MS-4**	

FWP Ammunition

107

AMMUNITION FAMILY HEM

AMMUNITION TYPE	*Land Mine*
DESIGNATION	*Special Mine Fuze System*
NAME/ASSIGNED MARK (original)	**USS-T**
COUNTRY of ORIGIN	Former *Yugoslavia,*

USS-T	
total weight of mine with detonators and transport safety device [*kg*]	*0.25*
explosive type	*depends on type of mine*
weight of explosive [*kg*]	
Heigh of body (mm)	*35*
Length of body (mm)	*90*
Width of body (mm)	*70*
dimension of pressure plate [*mm*]	
activation force (greater than) [*N*]	
effect of mine	*depends on type of mine*
type of fuze	
type of additional (anti-lift) fuze	

PACKING

Number of rounds in the package		**Weight of full package [*kg*]**	

DESCRIPTION

Super quick electronic fuze system USS–T was developed and produced in former Yugoslavia. It is the part of Yugoslavia family made of super quick fuzes designated mainly for booby traps. Each with a different operating principle mainly:
***USS-T** – photoelectric action, which goes off at the force of light more than 7 lux;*
***UST** – fuze/ timer with setting moderation of 5 to 9999 min.;*
***UST-T** – thermal control device, temperature sensitive, operates at select temperatures between -60 and + 50 degrees C.*
***USI-T** – inertial (quick movements) acceleration more then 1- 3 meters /sec or tilt to the angle more than 30 degrees;*
***USV-T** –vibration action; operates on vibration of definite acceleration,*
***UEPzh** – equipped by breaking wire ;*
***USA-T** – with acoustic (noise action), operates at four selectable sound levels. Normal voice to vehicle noise (90 db, 100 db, 110 db or 120 db).*
***USS-T** – **system** is composed of two connected airtight containers. One is a 9 volt battery and the second is electronic system. Dangerous zone and wave impact zone inference (shock wave) is dependent on the assumed type and size of the external load (mine). The ability to minor injuries from an electric fuze when connecting the electronic fuze kit. Explosive charge is connected to the control system.*

COLOR and MARKING

Body colour:	*Black, green, gray.*
Text colour:	*Black (white)*

FUZE

Type	**Characteristic**
electrical	***non contact, light sensitive***

SAFETY CONSIDERATION THREAT

Simple removal of mine with use system USS-T is very dangerous. Difficult to disarm (almost impossible until has power supply). Destroy on site.

NOTICE

The applicability of various types and sizes of explosives.

DRAWINGS/CUTAWAY/MARKING/STENCILING:	LEGEND
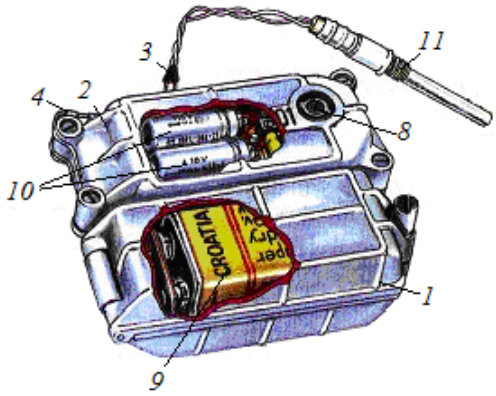 *fuze system* **USS-T**	*1 - the battery container; 2 - the container for the electronic system; 3 - electrical wire for an electric detonator; 4 - lever launch of the electronic system; 5 - marking name of the mine; 6 - marking short description of the electronic system and its type; 7 - marking lot of fuze and year of manufacture; 8 - mode setting mechanism fuze; 9 - The electric battery; 10 - electronic system; 11 - electric detonator.*
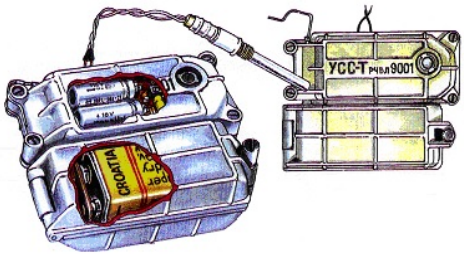 *fuze system* ***USS-T***	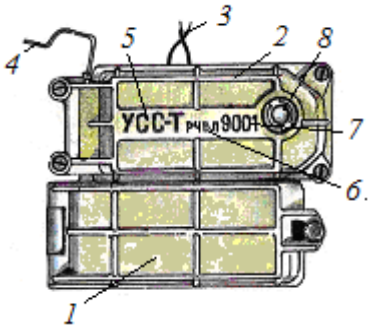 *fuze system* ***USS-T***
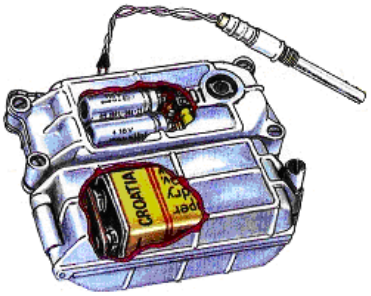 *fuze system* ***USS-T***	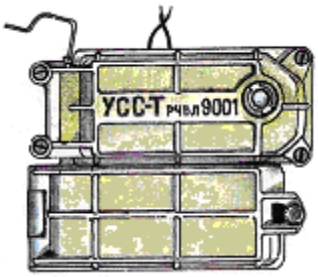 *fuze system* ***USS-T***

FWP Ammunition

108

AMMUNITION FAMILY HEM

AMMUNITION TYPE	*Land Mine*
DESIGNATION	*Anti-transport Blast Mine – Antirailways*
NAME/ASSIGNED MARK (original)	**ADM – 8**
COUNTRY of ORIGIN	*Former USSR*

ADM – 8	
total weight of mine with detonators and transport safety device [*kg*]	*24.2*
explosive type	*TNT*
weight of explosive [*kg*]	*12*
intermediate loads (booster charge) [kg]	*Tetryl*
weight of explosive [*kg*]	*2*
Diameter (mm)	*220*
height of body (mm)	*540*
dimension of pressure plate [*mm*]	
activation force (greater than) [*N*]	*250-500*
effect of mine	*Bottom diameter of about 10 m and a depth of about 3 m.*
type of central fuze	*Electric, with delaying*
type of additional (anti-lift) fuze	

PACKING

Number of rounds in the package		**Weight of full package [*kg*]**	

DESCRIPTION

Special antitransport blast mine ADM - 8 was developed and produced in former USSR. Mine is designed to destruct roads and railways. Produced from the 50's of last century, is in the service of the Russian Federation, Belarus, and North Vietnam. It consists of a cylindrical body with the explosive charge and the overlay of the electrical system, initiating an explosion and booster charge - tetryl. Pressure on a mine's rod with a force of about 250 – 500 N, causes a short circuit in the electrical system which activate the detonator.

COLOR and MARKING

Body colour:	green,
Text colour:	*Black*

FUZE

Type	**Characteristic**
Electric, with delaying	*Power source outside mine. Combined with an electric fuze wire.*

SAFETY CONSIDERATION THREAT

Mine is very sensitive. Simple removal of mine is very dangerous.

NOTICE

Difficult to disarm. The ability to control the outbreak remote control wire. Power source - battery connected to the outside by wires. Difficulties to obtain cross-sections of the mine, mainly the electrical system because it is massively used by the Russian Federation.

DRAWINGS/CUTAWAY/MARKING/STENCILING:	LEGEND
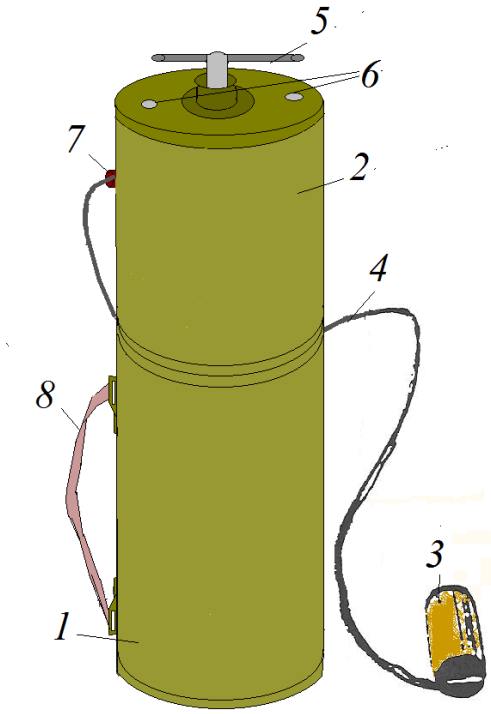 *Figure mine* ***ADM – 8***	*1 - body of mine with explosive charge 2 - overlay system 3 - the power source; 4 - electrical wire; 5 - lever cap screws connecting the body of the mine and at the same time the lever compression; 6 - holes; 7 - socket connection of the power source; 8 - handle* 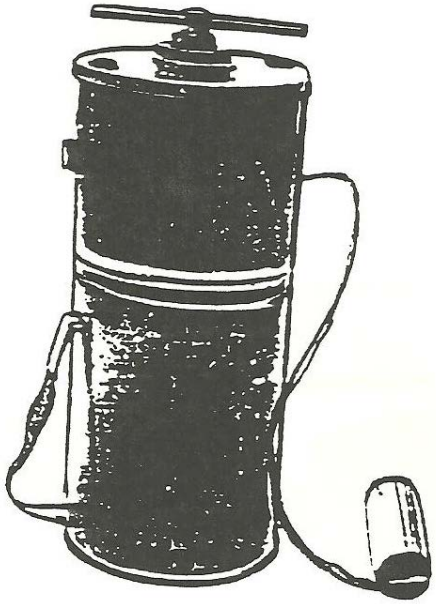 *Figure mine* ***ADM – 8***

FWP Ammunition

109

AMMUNITION FAMILY HEM

AMMUNITION TYPE	***Land Mine***
DESIGNATION	***Antipersonnel Special Chemical Mine in a Metal Body***
NAME/ASSIGNED MARK (original)	***CHF-1 / CHF-2***
COUNTRY of ORIGIN	*Former USSR*

CHF-1 / CHF-2

	CHF-1	CHF-2
total weight of mine with detonators and transport safety device [*kg*]	*15.4*	
explosive type	*TNT*	
weight of explosive [*kg*]	*0.1*	
main charge	*napalm or any other chemical charge.*	
tank capacity [litre]	*4.5*	
height of body (mm)	*245*	*280*
diameter (mm)	*150*	*190*
dimension of pressure plate [*mm*]		
activation force (greater than) [*N*]		
effect of mine	*depending on the used agent - combat, chemical.*	
type of fuze	*electrical, timing*	
type of additional (anti-lift) fuze	.	

PACKING

Number of rounds in the package		**Weight of full package [*kg*]**	

DESCRIPTION

Antipersonnel special chemical mines CHF-1 and CHF-2 were developed and produced in former USSR. The both mines are similar to the bounding fragmentation mine. The mine consists of cylindrical metal container containing a smaller cylindrical metal explosive unit. The external shell has a carrying handle and single groove through which the electrical detonation starting wire passes. A threaded metal plug closes the chemical filler on the top of the inner cylinder. Electrical initiation ignites the black powder propellant and a timed safety fuze. The safety fuze serves as a delay and initiates a detonator and explosive charge, which expels the chemical agent from the canister at a height of 4 to 8 m. The contaminated area is 250 – 300 square meters (10 m diameter). There are only small differences between CHF-1 and CHF-2 (some dimensions).

COLOR and MARKING

Body colour:	*green (can be painted white or yellow strip on the body of the mines)*
Text colour:	*Black*

FUZE

Type	Characteristic
Electric, with delay mechanism	*Power source outside mines. Combined with an electric fuze wire.*

SAFETY CONSIDERATION THREAT

Simple removal of mine is dangerous:

NOTICE

Armed - particularly dangerous. Destroy on site with the presence of specialists - chemists. Designation: possibility of a yellow or white stripe on the body signifying incendiary charge (white – phosphor or yellow - chemical). Not always painted.

DRAWINGS/CUTAWAY/MARKING/STENCILING:	LEGEND
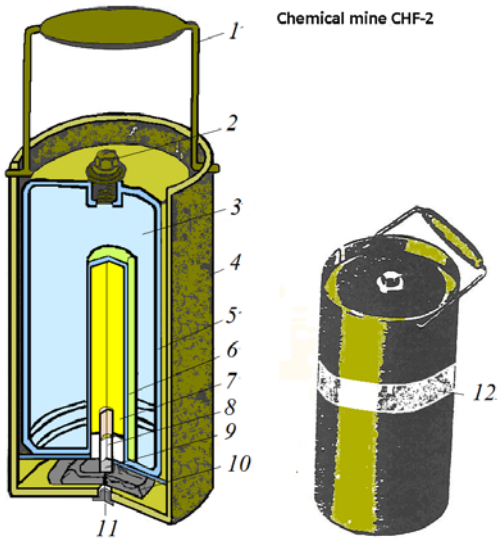	*1 - carrying handle;* *2 - plug the filling hole;* *3 - chemical charge;* *4 - External body - ejector;* *5 - inner body mine;* *6 – capsule for blasting;* *7 - explosive charge;* *8 – detonator well;* *9 - Powder delay mechanism;* *10 - propellant system;* *11 – detonator well;* *12 - white (yellow) band marked chemical charge (not always present)*

FWP Ammunition

110

AMMUNITION FAMILY HEM

AMMUNITION TYPE	*Land Mine*
DESIGNATION	*Anti-tank Blast Mine*
NAME/ASSIGNED MARK (original)	**APM** and **PPM**
COUNTRY of ORIGIN	*Former USSR*

	APM	PPM
total weight of mine with detonators and transport safety device [*kg*]	*9.2*	*9*
explosive type	*TNT or TNT/RDX 50:50*	*TNT or TNT/RDX 50:50*
weight of explosive [*kg*]	*5.7*	*5.7*
Booster charge (kg)	*Tetryl - 0.04*	*Tetryl – 0.04*
Height of body (mm)	*120*	*119*
Diameter (mm)	*300*	*300*
dimension of pressure plate [*mm*]		
activation force (greater than) [*N*]	*change in the electromagnetic field or pressure 1500- 2000 N*	*change of hydrostatic pressure 0.15 MPa*
effect of mine - to the width [*m*]	*penetration - about 35 mm RHA*	
type of fuze	*VPMA (electric)*	*VPMP (hydrostatic)*
type of additional (anti-lift) fuze		

PACKING

Number of rounds in the package		**Weight of full package [*kg*]**	

DESCRIPTION

Mines APM and MPM were Soviet production, designed to set the minefields on the frozen iced rivers and lakes. Used mainly in the north eastern regions of Europe and Asia. Possibility to use an electromagnetic fuze or a hydrostatic pressure fuze. Mine were used by the Russian Federation. Time of fuze activity till battery is discharged, approx. 20-25 days.

COLOR and MARKING

Body colour:	*Green (white)*
Text colour:	*Black*

FUZE

Type	**Characteristic**
VPMA	*Non-contact, electric, after the short circuit in the fuze system*
VPMP	*Non-contact, electric, an application of a pressure of 0.15 MPa on the fuze membrane*

SAFETY CONSIDERATION THREAT

Simple removal of mine is dangerous. Human cause's activation of the igniter by pressure on the membrane fuse VPMP.

NOTICE

Mine body is the same as mines TM – 56.

DRAWINGS/CUTAWAY/MARKING/STENCILING:	LEGEND
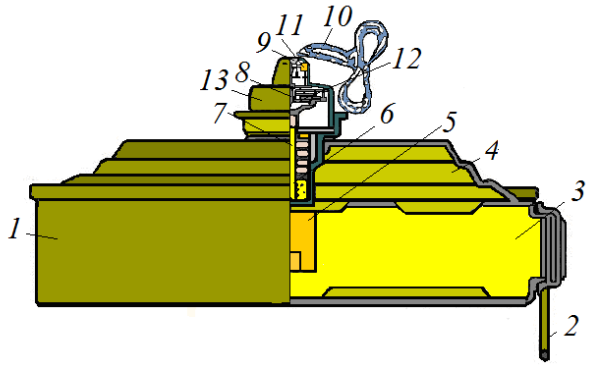 *Mine armed enabled* ***APM***	***Mine armed enabled APM the fuze VPMA (electric)*** *1 - body of mine; 2 - carrying handle;* *3 - explosive charge; 4 - pressure cover;* *5 – booster charge; 6-electric battery;* *7 - detonator; 8 - striker; 9 - fuze transport; safety 10 - string fuze transport; 11 - electric transducer; 12 - the transmission system;* *13 - fuze cover.*
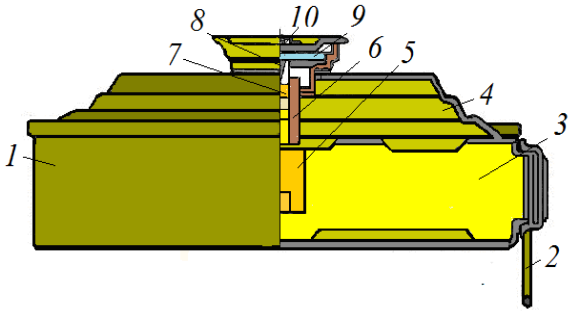 *Mine armed passive* ***PPM***	***Mine armed passive PPM the fuze VPMP (hydrostatic)*** *1 - body of mine; 2 - carrying handle;* *3 - explosive charge; 4 - pressure cover;* *5 – booster charge; 6 - booster;* *7 - detonator; 8 - striker; 9 - membrane;* *10 - plug the membrane with a hole pressure*

FWP Ammunition

111

AMMUNITION FAMILY HEM

AMMUNITION TYPE	*Land mine*
DESIGNATION	*Special Blast Mine in a Bakelite Body*
NAME/ASSIGNED MARK (original)	***MPM***
COUNTRY of ORIGIN	*Former USSR*

total weight of mine with detonators and transport safety device [*kg*]	*0.843*
explosive type	*TG-50*
weight of explosive [*kg*]	*0.315*
height of body (mm)	*46*
length of body (mm)	*146*
width of body (mm)	*71*
dimension of pressure plate [*mm*]	
activation force (greater than) [*N*]	
effect of mine	
type of fuze	*VZD-3M with detonator MD-2*
type of additional (anti-lift) fuze	

PACKING

Number of rounds in the package		**Weight of full package [*kg*]**	

DESCRIPTION

Special blast mine MPM was developed and produced in former USSR. Mine is also known as the mine Type 158. Mine was produced in Poland as well. Mine MPM consists of a rectangular bakelite body filled with explosive material. MPM has two horse-shoe magnets at the both ends of the bottom side for fastening mine to the metal objects. Delay works on the same principle as the pass Mk III and BPM (fuzes lead).

COLOR and MARKING

Body colour:	*Brown (color bakelite)*
Text colour:	*Black*

FUZE

Type	Characteristic
VZD-3	*Timing, mechanical, noncontact, the detonation time is determined by the type of lead plates. Detonator MD-2*

SAFETY CONSIDERATION THREAT

Mine is very sensitive. Difficult to disarm (almost impossible).

NOTICE

Similar structures: Korean version of the mines TYPE 158; English mine Clam Limpat MK. III.
Destroy on the site.

DRAWINGS/CUTAWAY/MARKING/STENCILING:	LEGEND
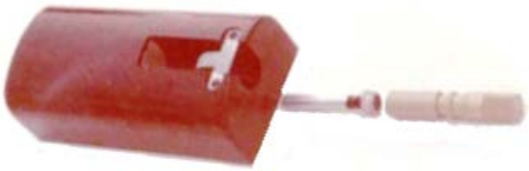 *Mine MPM*	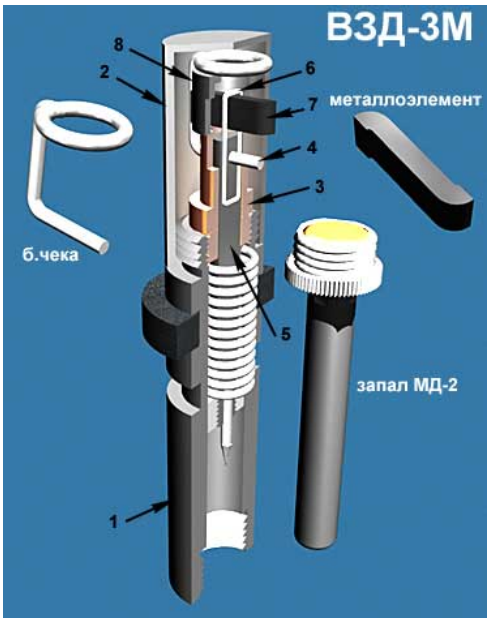 *Fuze VZD-3M with detonator MD-2*
Fuze of mine MPM - VZD-3M	
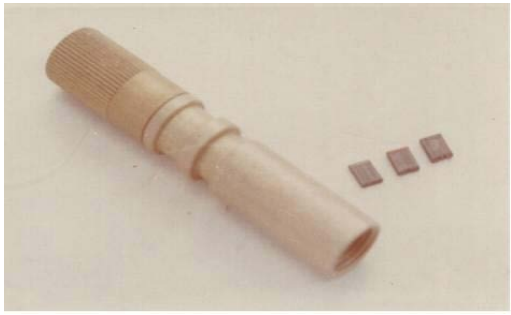 *Fuze VZD-3M – picture*	*picture mine MPM*

FWP Ammunition

112

AMMUNITION FAMILY HEM

AMMUNITION TYPE	*Land Mine*
DESIGNATION	*Special Signal Mine*
NAME/ASSIGNED MARK (original)	**MOP-2**
COUNTRY of ORIGIN	*Poland;*

MOP-2	
total weight of mine with detonators and transport safety device [kg]	*1.6*
explosive type	*powder charge / pyrotechnic mixture*
weight of explosive [kg]	*0.14*
height of body (mm)	*320*
Diameter (mm)	*180*
dimension of pressure plate [*mm*]	
activation force (greater than) [*N*]	
effect of mine	*Illumination of the area for about 45-50 seconds.* *The Power of Light - 125 thousand candle*
type of fuze	*MUV, MUV -2 M.*
type of additional (anti-lift) fuze	

PACKING			
Number of rounds in the package		**Weight of full package [*kg*]**	

DESCRIPTION

Special signal mine MOP-2 was developed and produced in Poland. The mine is also used by the Russian Federation. Mine is designated for illuminating the area, expose the approach of the enemy or the groups penetration or to uncover minefields, etc. The power of light is about 125 thousands candles. The signal warhead is on a parachute. The fuze activates the primer, and then starts the burning of the propelling charge, which expels the signal warhead with pyrotechnic mixture including parachute into the air. After 4 -5 seconds followed by expelling of the warhead from the barrel, the delaying devices initiates the pyrotechnic mixture burning. Operation time is about 40-50 seconds.

COLOR and MARKING

Body colour:	*green*
Text colour:	*Black*

FUZE

Type	**Characteristic**
MUV, MUV -2 M.	*pressure, mechanical, contact*

SAFETY CONSIDERATION THREAT

Simple removal of mine is dangerous.

NOTICE

Disposal - by burning, or by detonation. Up to 100 mines can destroy at the same time. Pay attention, to a radius of about 200m must not be any flammable objects or dry trees.

DRAWINGS/CUTAWAY/MARKING/STENCILING:		LEGEND
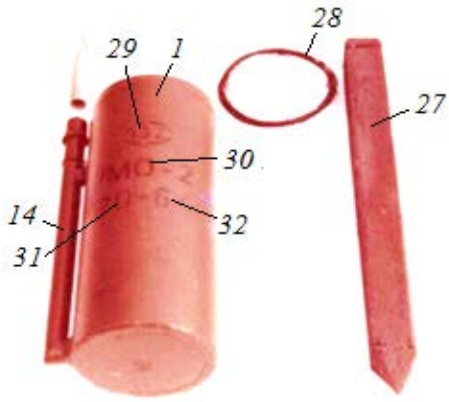 *Mine MOP-2 - picture*		*1 – body of mine ; 2 - upper cover; 3 – cardboard cover; 4 - parachute; 5 - internal mine body; 6 - pyrotechnic mixture upper cover ; 7 - container with pyrotechnic mixture; 8 - pyrotechnic mixture; 9 – striker; 10 – safety pin; 11 - 12 - primer KV-11; 16 – propelling charge; 17 - initiator ; 18 – pyrotechnic delaying; 21 - the base of the warhead; 25 - fuze MUV; 26 - detonator MD-2M; 27 – wooden stake; 28 - wire extraction; 29 - marking control of manufacture; 30 - marking the name of the mine; 31 – marking lot of manufacture; 32 - year of manufacture Invisible index the number of manufacturer*
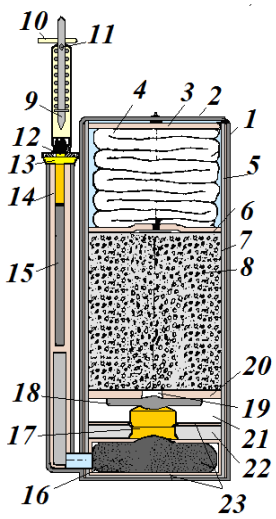 *cross sectoion of mine MOP2*	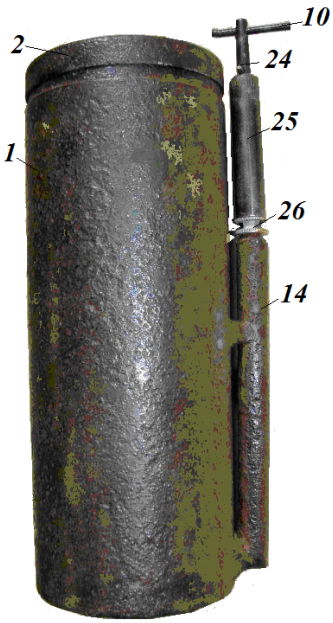 *MOP-2*	 *mine MOP-2* *mine MOP-2*

FWP Ammunition

113

AMMUNITION FAMILY HEM

AMMUNITION TYPE	*Land Mine*
DESIGNATION	*Special Signal Mine in a Metal Body - Stake Mine*
NAME/ASSIGNED MARK (original)	**PŁOMIEŃ 60 (FLASH 60)**
COUNTRY of ORIGIN	*Poland;*

PŁOMIEŃ 60 (FLASH 60)	
total weight of mine with detonators and transport safety device [*kg*]	*0.8*
explosive type	*pyrotechnic mixture in cartridge 26 mm*
weight of explosive [*kg*]	
height of body (mm)	*260*
diameter (mm)	*30*
dimension of pressure plate [*mm*]	
activation force (greater than) [*N*]	
effect of mine	*Time of illumination - about 20 to 30 seconds.* *The Power of Light - about 2 500 candles*
type of fuze	*MUV (solid, integrated with the mine)*
type of additional (anti-lift) fuze	

PACKING

Number of rounds in the package		**Weight of full package [*kg*]**	

DESCRIPTION

Special signal mine PŁOMIEŃ 60 was developed and produced in Poland. The mine is designated for illuminating the area and to expose the approach of the enemy or the penetration of the groups or to uncover minefields, etc. The mine shoots 26 mm signal cartridge on a parachute. The fuze activates 26 mm signal cartridge primer. Light intensity and duration of action depends on the type (color) of the signal charge from the cartridge 26 mm.

COLOR and MARKING

Body colour:	*brown*
Text colour:	---------

FUZE

Type	**Characteristic**
MUV.	*Tension activities integrated with the mine.*

SAFETY CONSIDERATION THREAT

Simple removal of mine is dangerous.

NOTICE

Disposal by detonation.

DRAWINGS/CUTAWAY/MARKING/STENCILING:	LEGEND
 Special Signal Mine (FLASH 60) PŁOMIEŃ -60	*1 - body; 2 - cover; 3 - striker; 4 – striker spring,* *5 – Safety pin; 6 - hole for the pin;* *7 - signal cartridge; 11 - stake*
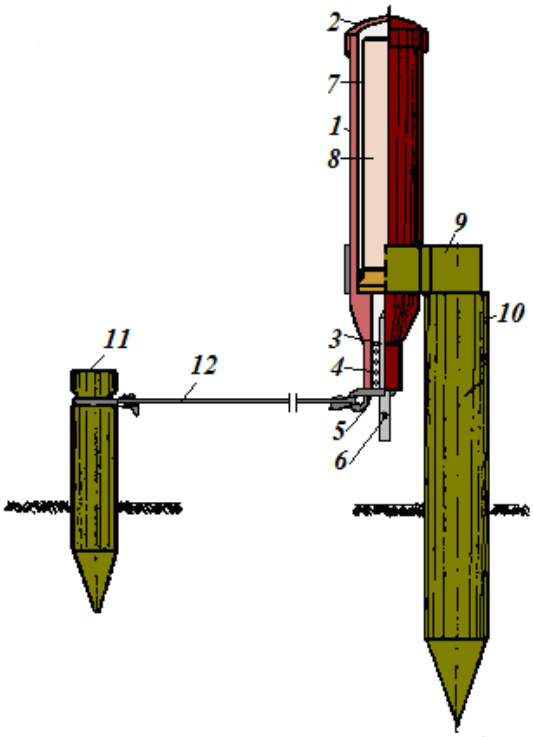 *cross section of mine (FLASH 60) PŁOMIEŃ -60*	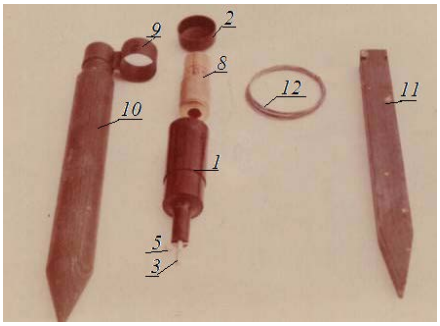 *Special Signal Mine (FLASH 60) PŁOMIEŃ -60*

FWP Ammunition

114

AMMUNITION FAMILY HEM

AMMUNITION TYPE	*Land Mine*
DESIGNATION	*Special Signal Mine in a Metal Body - Stake Mine*
NAME/ASSIGNED MARK (original)	**SM**
COUNTRY of ORIGIN	*Former USSR*

SM	
total weight of mine with detonators and transport safety device [*kg*]	*0.7*
explosive type	*pyrotechnic mixtures*
weight of explosive [*kg*]	*0.256*
diameter (mm)	*25*
height of body (mm)	*278*
dimension of pressure plate [*mm*]	
activation force (greater than) [*N*]	
effect of mine	*visual and acoustic range to 500*
type of central fuze	*MUV, MUV -2 M.*
type of additional (anti-lift) fuze	

PACKING			
Number of rounds in the package		**Weight of full package [*kg*]**	

DESCRIPTION

Special signal mine SM was produced and developed in former USSR. The signal mine launches a pyrotechnic signal stars to a height of 5 to 25 m and simultaneously generates an acoustic signal. The base of the mine is painted either white or green or red to reflect the colour of the signal stars. The pyrotechnic effect lasts 10 to 12 sec, the acoustic signal lasts 8 to 10 sec.

COLOR and MARKING

Body colour:	*green*
Text colour:	*Black*

FUZE

Type	**Characteristic**
MUV, MUV -2 M.	mechanical, contact, pressure

SAFETY CONSIDERATION THREAT

Mine has no immediate threat to life or health. The possibility of minor injuries during the manipulation with mine.

NOTICE

Mine does not cause danger to life or health, but accidents could happen, especially when disarming.

DRAWINGS/CUTAWAY/MARKING/STENCILING:	LEGEND
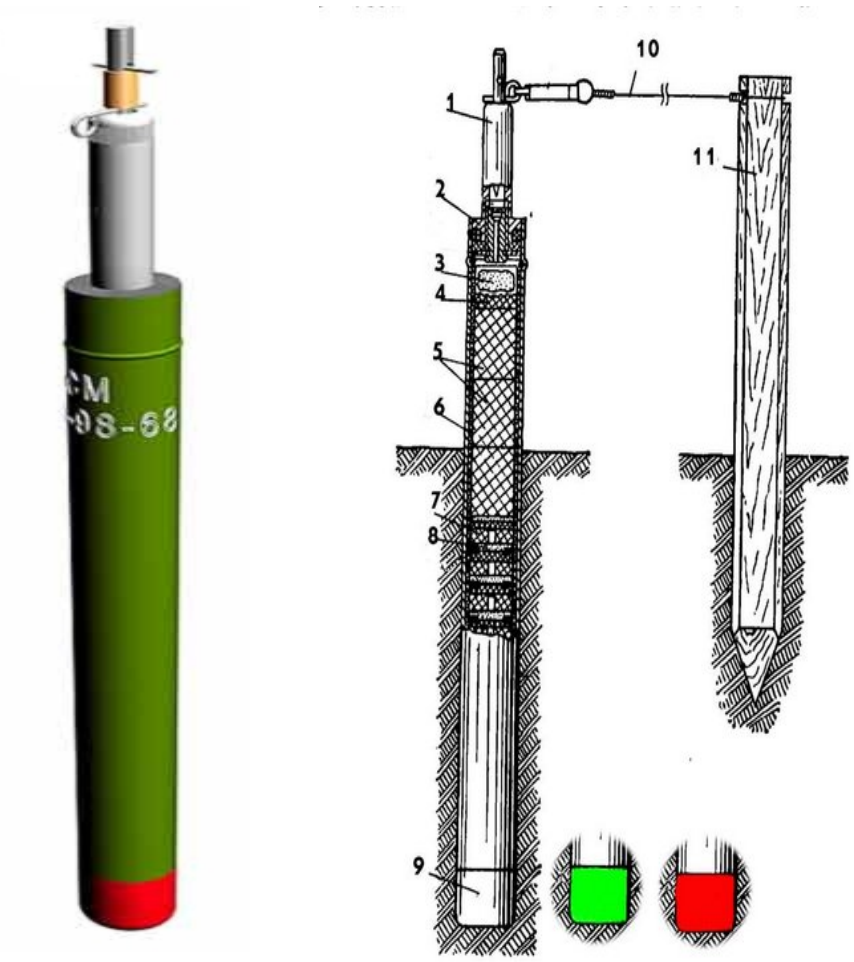	**A-VIEW MINE;** **B-SECTION MINES.** *1 – fuze MUV (MUV-2)body* *2 - fuze well* *3 – powder charge;* *4 - cover;* *5 – powder charge;* *6 – mine body;* *7 - covers;* *8 – signal charges;* *9 – marking signal colours;* *10 - tripwire;* *11 – wooden stake;*

FWP Ammunition

115

AMMUNITION FAMILY HEM

AMMUNITION TYPE	*Land Mine*
DESIGNATION	*Special Anti-helicopter Mine in a Metal Body*
NAME/ASSIGNED MARK (original)	***IZMR-11***
COUNTRY of ORIGIN	*POLAND*

IZMR-11	
total weight of mine with detonators and transport safety device [*kg*]	*22*
explosive type	*HMX*
weight of explosive [*kg*]	*3*
diameter (mm)	*400*
height of body (mm)	*500*
dimension of pressure plate [*mm*]	
activation force (greater than) [*N*]	*Acoustic and IR signal*
effect of mine	*Up to 60 mm RHA*
type of central fuze	*AC-acoustic sensor–range 1000 m; IR - infrared sensor- range 150 m*
type of additional (anti-lift) fuze	

PACKING			
Number of rounds in the package	*1*	**Weight of full package [*kg*]**	*16.7*

DESCRIPTION

Special anti-helicopter mine IZMR-11 was developed and produced in Poland. Mine maps over the airspace and its mission is to track the flying objects at the speeds up to 300 km/h in a height up to 150 m. After mine´s initiation is formed two explosive projectiles. These two projectiles fly with an initial velocity 2600 m/s. They have the capability to penetrate the helicopter armor, equivalent to RHA plate with a thickness of 60 mm. Mine is remotely armed and disarmed, which allows to repeat the using of the mine more times. Mine may be partially buried, which makes it easier to camouflage. An operational time combat mine is 35 days.

COLOR and MARKING

Body colour:	*green*
Text colour:	*black*

FUZE

Type	**Characteristic**
Electronic with *AC and IR sensors*	*AC-acoustic sensor; IR - infrared sensor, electronic, noncontact,*

Simple removal of mine is very dangerous. Destruction by an explosive on the site.

NOTICE

Mine IZMR -11 is arming and disarming by the remote optical signal (the receiver is placed at the top of the microphone). Drawback of mine: an electronic system is poorly resistant to strong alternating electromagnetic field or electromagnetic pulse.

DRAWINGS/CUTAWAY/MARKING/ STENCILING:		LEGEND
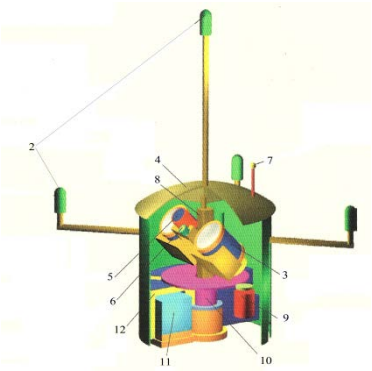 *Cross-section of mine IZMR-11*	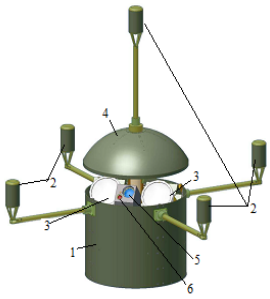	*1-body of mine; 2-acoustic sensors; 3- explosively formed projectile units; 4- cover of the mine; 5- optical sensor (infrared) to detect the helicopter; 6-infrared sensor to detect decoy flares; 7-antenna for remote control system; 8- lift to the lid; 9 - engine; 10 - team starting platform; 11- the power source (battery); 12 electronic assemblies.*
mine IZMR 11	*mine IZMR-11 in combat position.*	*mine IZMR-11 in combat position.*
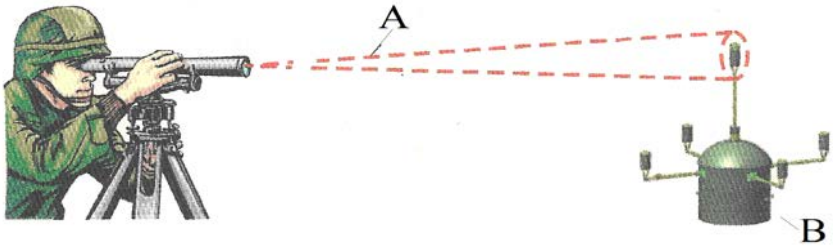 *remote arming and disarming of the mine IZMR-11* *A-optical beam of light; B - mine IZMR -11*		

FWP Ammunition

116

AMMUNITION FAMILY HEM

AMMUNITION TYPE	*Land Mine*
DESIGNATION	*Special Blast Mine in a Plastic Body – Limpet Mine*
NAME/ASSIGNED MARK (original)	***MPR-M85***
COUNTRY of ORIGIN	*former Yugoslavia;*

PMR-M85

total weight of mine with detonators and transport safety device [*kg*]	*1.6*
explosive type	*PEP (PETN based plastic explosive)*
weight of explosive [*kg*]	*0.400*
diameter (mm)	*165*
height of body (mm)	*90*
dimension of pressure plate [*mm*]	
activation force (greater than) [*N*]	
effect of mine	*to 15 mm RHA*
type of fuze	*Electrical integrated*
type of additional (anti-lift) fuze	

PACKING

Number of rounds in the package		**Weight of full package [*kg*]**	

DESCRIPTION

The special limpet mine MPR-M85 was developed and produced in former Yugoslavia. The mine was designed primarily for land-based sabotage missions, although it can be used underwater in depths up to 10 meters. It is a circular mine with an electronic time fuze and contains 400 g (PEP – PETN based plastic explosive). Before placing the mine in position, the electronic timing delay is set manually. The delay is either 15 or 30 minutes or 1, 2, 4, 8 and 16 hours. When the delay time has been set and a safety pin is removed, there is an arming time 7.5 min before the fuze is armed. After the mine has been armed, an anti-disturbance fuze is set to prevent removing.

COLOR and MARKING

Body colour:	*green*
Text colour:	*Black*

FUZE

Type	**Characteristic**
INTEGRATED	*time, electrically powered, anti-shock*
Integrated	*Anti-disturbance fuze*

SAFETY CONSIDERATION THREAT

Simple removal of mines is very dangerous: Irremovable.

NOTICE

Mine is designed for sabotage. Used in Afghanistan, Iraq, Pakistan, the Russian Federation

DRAWINGS/CUTAWAY/MARKING/STENCILING:	LEGEND
 View the base of the mine PMR-M85	*1-led diodes; 2- lid of 9V battery comp 3/T/T 101 with data about timing; 3- two magnets for fixation purposes; 4- magnetic switch with read contact for start of working; 5- timing and anti-removal switch; 6 (7) - mechanical safety; 8- casing mode from polystyrene, strengthen with edges; 9- attaching handles; 10- plate with data about type, manufacturer, lot and year of manufacture.*
 view of the top of the mine PMR-M85	 *mine PMR-M85*
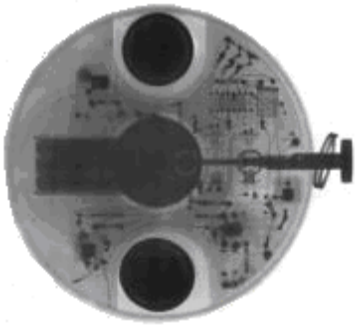 *The electronic circuit diagram mine PMR-M85*	

FWP Ammunition

117

AMMUNITION FAMILY HEM

AMMUNITION TYPE	*Land Mine*
DESIGNATION	*Special Anti-helicopter mine*
NAME/ASSIGNED MARK (original)	***TEMP-20***
COUNTRY of ORIGIN	*The Russian Federation*

TEMP-20	
total weight of mine with detonators and transport safety device [*kg*]	*12*
explosive type	*TG-50 (TNT/RDX 50:50)*
weight of explosive [*kg*]	*6.4*
diameter (mm)	*475*
height of body (mm)	*455*
dimension of pressure plate [*mm*]	
activation force (greater than) [*N*]	
effect of mine	*EFP (explosively formed projectile)- velocity 2500 m/s*
type of central fuze (sensors)	*AC-acoustic sensor, range 1000 m - 6 pc; IR - infrared sensor, range 250 m -1 pc.*
type of additional (anti-lift) fuze	

PACKING

Number of rounds in the package	*1*	**Weight of full package [*kg*]**	*14.9*

DESCRIPTION

TEMP 20 is the temporary designation for Russian prototype a wide-area anti-helicopter mine. The 12 kg TEMP 20 can destroy a helicopter that comes within a range of 250 m at a speed less than 400 km/h. It is designed to fight against helicopters which fly close to the ground in order to evade conventional air-defence systems. The passive, all-weather acoustic sensors detect the helicopter by identifying it through the specific characteristics noise of the helicopter. This passiveness allows the mine to operate on a single battery for 45 days. The acoustic sensors can detect a helicopter at a range of 2 km, but alerts the mine's infrared sensor only when the potential target comes within a range of 250 m. When the target is tracked, the sensor launches a cylinder-shaped 450 g copper projectile (Explosively Formed Projectile). The projectile starts at a velocity of 2500 to 3500 m/sec, but may slow down to1700 m/sec by the time the target is hit. The kinetic effect on impact is lethal. In its early development stages, the mine was configured as a cylinder with six folding fins. The latest version of the TEMP 20-4 comes as a square box with sides that fold down to reveal the warhead. Surrounding the warhead are six acoustic sensors and an infrared sensor. The copper warhead is centrally mounted on a green pedestal, matching the rest of the mine. Mine TEMP 20 can be placed manually only. Working time 90 – 180 days.

COLOR and MARKING

Body colour:	*green*
Text colour:	*black*

FUZE

Type	**Characteristic**
electronic, AC i IR	*AC-acoustic sensor; IR - infrared sensor*

SAFETY CONSIDERATION THREAT

Simple removal of mine is very dangerous: After discharging the battery takes self-destruction, but often fails electronic system. In this case, you can disarm the mine and transport. Until the batteries are discharged mine is indelible. Neutralization by an explosive in a place.

NOTICE

Hazardous area - 35 meters (from the sides and backward mines).

DRAWINGS/CUTAWAY/MARKING/STENCILING:	LEGEND
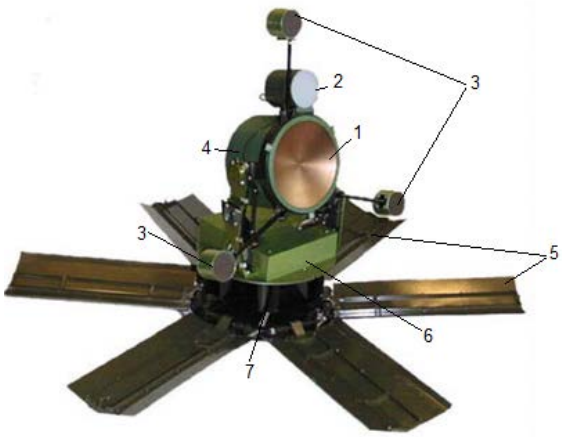 *mine TEMP-20 in combat position (cylindrical head with one bullet)*	*1 -combat element mine (shaped charge)* *2- infrared sensor;* *3 -acoustic sensors;* *4 cylindrical body combat element;* *5-stabilizers (base mines);* *6-electronic assembly;* *7-drive unit, electric head*
 mine TEMP-20 in combat position (cylindrical head with one bullet)	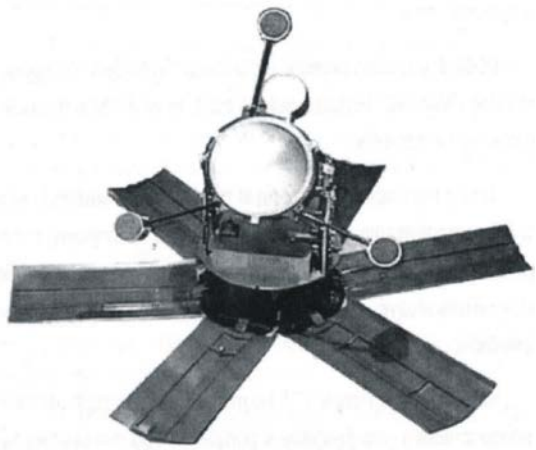 *mine TEMP-20 in combat position (cylindrical head with one bullet)*

FWP Ammunition

118

AMMUNITION FAMILY HEM

AMMUNITION TYPE	*Land Mine*
DESIGNATION	*Special Anti-helicopter mine*
NAME/ASSIGNED MARK (original)	***TEMP-20-4***
COUNTRY of ORIGIN	*The Russian Federation*

TEMP-20-4	
total weight of mine with detonators and transport safety device [*kg*]	*12.8*
explosive type	*TG-50 (TNT/RDX 50:50)*
weight of explosive [*kg*]	*6.4*
height of body (mm)	*520 with the head tilted; transport position - 455*
length of body (mm)	*455*
width of body (mm)	*475*
dimension of pressure plate [*mm*]	
activation force (greater than) [*N*]	*acoustic and IR sensor*
effect of mine	*projectile EFP (explosively formed projectile)- 4 pcs*
type of fuze	*AC-acoustic sensor, range 1000m – 6 pcs; IR – infrared sensor, range 250 m - 1 pcs*
type of additional (anti-lift) fuze	

PACKING

Number of rounds in the package	*1*	**Weight of full package [*kg*]**	*15.6*

DESCRIPTION

TEMP 20-4 is the temporary designation for a Russian prototype wide-area anti-helicopter mine. The 12 kg TEMP 20-4 can destroy a helicopter that comes within a range of 250 m at a speed less than 400 km/h. It is designed to fight helicopters that fly close to the ground in order to evade conventional air-defence systems. The passive, all-weather acoustic sensors detect the helicopter by identifying it through the specific characteristics noise of the helicopter. This passiveness allows the mine to operate on a single battery for 45 days. The acoustic sensors can detect a helicopter at a range of 2 km, but alerts the mine's infrared sensor only when the potential target comes within a range of 250 m. When the target is tracked, the sensor launches a cylinder-shaped 450 g copper projectile (Explosively Formed Projectile). The projectile starts at a velocity of 2500 to 3500 m/sec, but may slow down to 1700 m/sec by the time the target is hit. The kinetic effect on impact is lethal. Surrounding the warhead are six acoustic sensors and an infrared sensors. The copper warhead is centrally mounted on a green pedestal, matching the rest of the mine. Mine TEMP-20-4 can be placed automatically (from vehicle).The warhead has four independent shaped charges to create 4 EFP. Working time is 90-180 days.

COLOR and MARKING

Body colour:	*green*
Text colour:	*black*

FUZE

Type	**Characteristic**
electronic, AC i IR	*AC-acoustic sensor; IR - infrared sensor*

SAFETY CONSIDERATION THREAT

Simple removal of mine is very dangerous: After discharging the battery takes self-destruction, but often fails electronic system. In this case, you can disarm the mine and transport. Until the batteries are discharging mine is indelible. Neutralization by an explosive in a place. Hazardous area - 35 meters (from the sides and backward mines).

NOTICE

The ability to use different of the warheads from the head cylindrical with a single bullet to the head with six bullets molded explosively. The manual time setting of mine – up to 5 min. The sensitivity of acoustic sensors - about 0.6 dB. Time transition from wakefulness to working - about 1.5 sec.

DRAWINGS/CUTAWAY/MARKING/STENCILING:	LEGEND
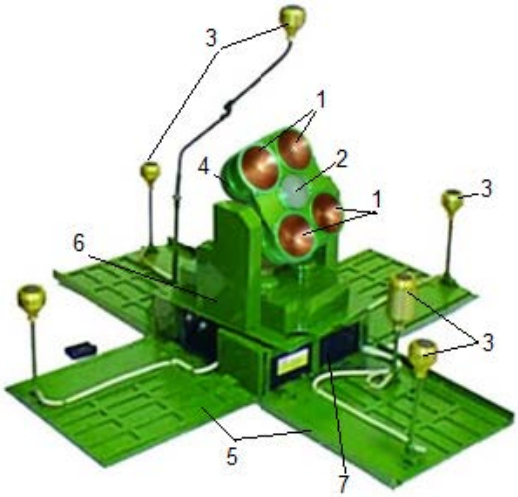 *the current version of mine TEMP-20 - 4*	*1- combat elements of mine-4 explosively formed projectiles (EFP projectiles),* *2- infrared sensor,* *3 -six-acoustic sensors;* *4- body combat elements;* *5-stabilizers (base mines);* *6-electronic assembly;* *7-drive unit, electric head*
 the current version of mine TEMP-20 - 4	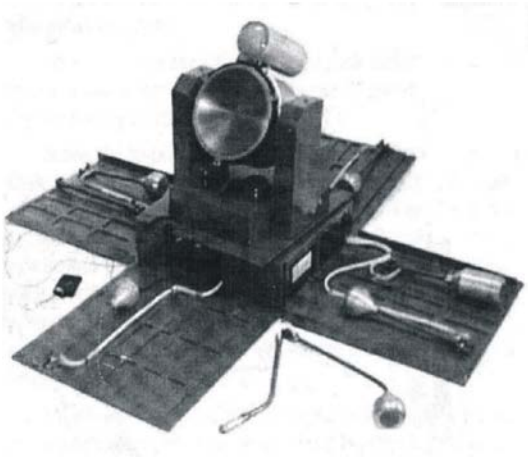 *The former version mine TEMP-20-4*

FWP Ammunition

119

AMMUNITION FAMILY HEM

AMMUNITION TYPE	*Land Mine*
DESIGNATION	*Special Antitank Top Attack Mine*
NAME/ASSIGNED MARK (original)	***TEMP-30***
COUNTRY of ORIGIN	*The Russian Federation*

TEMP-30	
total weight of mine with detonators and transport safety device [*kg*]	*25, flying part - 10*
explosive type	*2 charges TG-50 (TNT / RDX 50:50)*
weight of explosive [*kg*]	*4.2*
diameter (mm)	*Rocket - 190*
length of body (mm)	*900*
dimension of pressure plate [*mm*]	*900*
activation force (greater than) [*N*]	*AC and IR sensor*
effect of mine	*100 mm RHA plate*
type of fuze	*AC-acoustic sensor -1 pcs; IR - infrared sensor -1 pcs.*
type of additional (anti-lift) fuze	

PACKING

Number of rounds in the package	*1*	**Weight of full package [*kg*]**	*25*

DESCRIPTION

TEMP 30 is the temporary designation for a novel prototype of-route mine designated to defeat tanks and armoured vehicles at range up to 100 m. The entire system is mounted in a steel box. The acoustic and seismic sensors are used to identify the target at the ranges up to 120 m. The warhead section contains two shaped charge warheads (the same types are used in TEMP-20 mines). The warheads are angled at 10° to one another and are initiated by two channel infrared sensor. The rocket has a speed 160 m/sec.

COLOR and MARKING

Body colour:	*green*
Text colour:	*Black*

FUZE

Type	**Characteristic**
electronic, AC and IR	*Integrated with the mine. Certain number of switches can be programmed automatically, select self-destruction or self-neutralization of the mine.*

SAFETY CONSIDERATION THREAT

Simple removal of mine is very dangerous. After discharging the battery self-destruction is initiated, but often fails electronic system. In this case, the mine can be disarmed and transported. Until the batteries are discharged mine is indelible. Neutralization by an explosive on the site. Hazardous area - 35 meters (from the sides and backward mines).

NOTICE

All data are protected by the manufacturer and are difficult to access. Mine is intended for airspace surveillance and for combat armored vehicles (as mine against flatbed). Explosively formed projectile is moving at a speed of 200m/s. Penetration - 100 mm RHA from a distance max. 100 m.

DRAWINGS/CUTAWAY/MARKING/STENCILING:	LEGEND
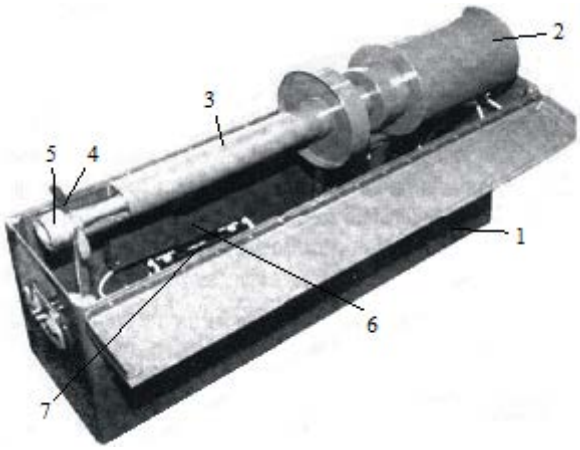 *mine TEMP-30*	*1- steel box;* *2- 2 shaped charge warheads;* *3- 3- infrared and acoustic sensors ;* *4- 4 stabilized fins;* *5- 5-infrared sensor;* *6- 6-starting platform;* *7- 7-electronics starting platform.*
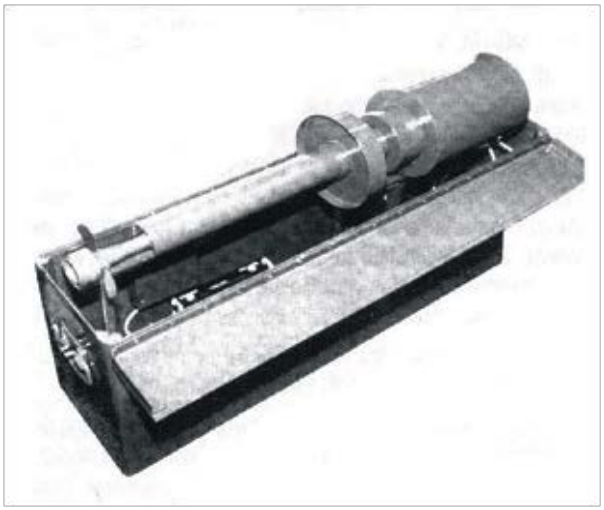 *mine TEMP-30*	

FWP Ammunition

120

AMMUNITION FAMILY HEM

AMMUNITION TYPE	*Land Mine*
DESIGNATION	*Directional Fragmentation Anti-Helicopter Mine*
NAME/ASSIGNED MARK (original)	***AHM-200-1****(AHM-200, AHM-200-1RC, AHM-200-2)*
COUNTRY of ORIGIN	*BULGARIA*

AHM-200-1 (AHM-200, AHM-200-1RC, AHM-200-2)	
total weight of mine with detonators and transport safety device [*kg*]	*90 (AHM-200-30 .)*
explosive type	*TNT*
weight of explosive [*kg*]	*AHM-200 - 10*
diameter (mm)	*150*
height of body (mm)	*400*
dimension of pressure plate [*mm*]	
activation force (greater than) [*N*]	*AC and IR sensor*
effect of mine	
type of fuze (sensors)	*AC - acoustic sensor, range 500 m -2 pcs; DOPP - Doppler sensor, range 150 m*
type of additional (anti-lift) fuze	

PACKING

Number of rounds in the package		**Weight of full package [*kg*]**	

DESCRIPTION

*The directional fragmentation mines **AHM-200-1, AHM-200, AHM-20-2** are Bulgarian directional fragmentation mines, can be used with proximity fuzes as anti-helicopter mines. The fuze uses two sensors. The first, an acoustic sensor, arms the mine when a helicopter approaches. The second sensor is the radar, which locates the target and triggers the mine at the appropriate point. The **AHM-200** weights 35 kilograms and contains 12 kilograms of TNT. The mine's warhead has two sections, a large rectangular warhead with a pre-notched fragmentation liner that produces 1,960 fragments, and a secondary warhead with five plates that produce large self-forging fragments. The fragments scatter in an arc of 20 degrees to an effective range of 200 meters, and penetrate 10 mm of armour at 100 meters.*

*The **AHM-200-1** weights 90 kilograms. Like the AHM-200 it consists of two sections, a large circular fragmentation warhead with a filling of ball bearings, and a horizontal section with five Misznay Schardin effect plate charges. The two sections are mounted on a sturdy tripod with a sensor mounted above that contains a Doppler radar fuze and an acoustic fuze. The mine has an effective range of about 100 meters.*

*The **AHM-200-2** weights 90 kilograms, and is similar to the AHM-200-1, except that it uses a rectangular fragmentation warhead that produces 1,960 fragments.*

Mine is equipped with sensors to protect mine from attempting to disarm or transfer. Possibility of remote activation and neutralization using radio waves from a distance of 2000 m (version AHM-200-1RC).

COLOR and MARKING

Body colour:	*green*
Text colour:	*Black*

FUZE

Type	**Characteristic**
AC; DOPP	*An integrated system of sensors - acoustic and Doppler radar*

SAFETY CONSIDERATION THREAT

Simple removal of mine is very dangerous. Irremovable. Destroy on the site.

NOTICE

Mine is not activated by random sounds, passing people, animals, passing military vehicles. Version AHM-200-2 is a modified version of the mines AHM-200-1.

DRAWINGS/CUTAWAY/MARKING/STENCILING:		LEGEND
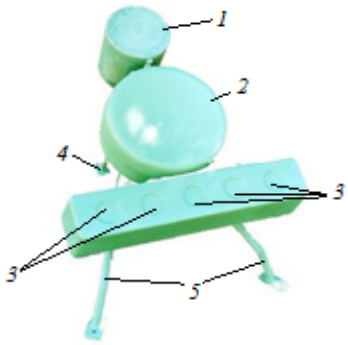 *mine AHM-200-1*		*1 - Doppler radar sensor;* *2 - warhead;* *3 - acoustic sensors;* *4 -5 support tripod ;* *6 - marking - name of the mine; lot number;* *7 - Doppler sensor index.*
	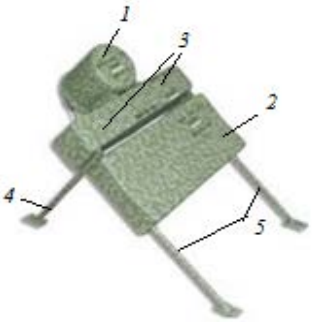	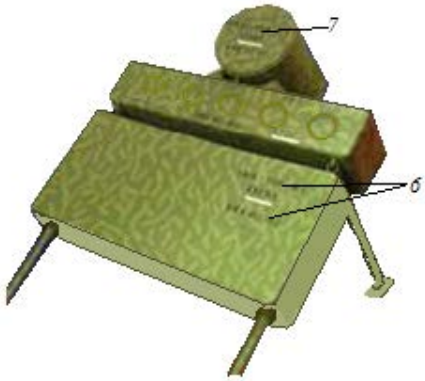 *mine AHM-200-2 (learner version - white strap)*

FWP Ammunition

121

AMMUNITION FAMILY HEM

AMMUNITION TYPE	*Land Mine*
DESIGNATION	*Directional Fragmentation Anti-Helicopter Mine*
NAME/ASSIGNED MARK (original)	*4 AHM-100*
COUNTRY of ORIGIN	*BULGARIA*

4 AHM-100

total weight of mine with detonators and transport safety device [*kg*]	*125*
explosive type	*TNT*
weight of explosive [*kg*]	*40*
diameter (mm)	*150*
height of body (mm)	*400*
dimension of pressure plate [*mm*]	
activation force (greater than) [*N*]	*AC and DOPP sensor*
effect of mine	
type of fuze	*AC - acoustic sensor, range 500 m -2 pcs; DOPP - Doppler sensor, range 150 m*
type of additional (anti-lift) fuze	

PACKING

Number of rounds in the package	*1*	**Weight of full package [*kg*]**	*125*

DESCRIPTION

The 4 AHM-100 is Bulgarian directional fragmentation mine, that can be used with proximity fuzes as anti-helicopter mine. The fuze uses two sensors. The first, an acoustic sensor, arms the mine when a helicopter approaches. The second sensor is radar, which locates the target and triggers the mine at the appropriate point. The mine use a number of large Misznay Schardin effect warheads to project fragments to an effective range of about 200 meters. The 4 AHM-100 mine consists of four fragmentation warheads (each about 30 kg) arranged in a square (an area around 0.4 km^2) with a central single sensor unit. The whole mine weights 125 kg. All fragmentation warheads are equipped with explosive charges and detonators initiated simultaneously on the command by a sensor unit. The heads are arranged horizontally on the ground, along with a sensor unit. Working time to 30 days.

COLOR and MARKING

Body colour:	*green*
Text colour:	*Black*

FUZE

Type	Characteristic
AC; DOPP	*An integrated system of sensors – acoustic and Doppler radar*

SAFETY CONSIDERATION THREAT

Simple removal of mine is very dangerous: Irremovable. Destroy on site.

NOTICE

Combat system of mine AHM -100 is connected to the central system sensor unit. Most of the technical data is reserved by the manufacturer.

DRAWINGS/CUTAWAY/MARKING/STENCILING:	LEGEND
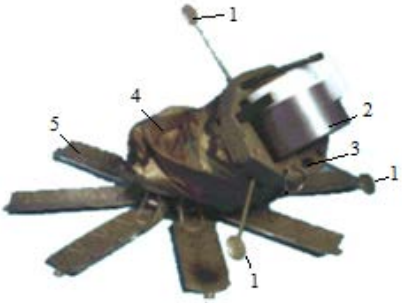 *Mine AHM-100*	*1 - acoustic sensors;* *2 - warhead ;* *3 - Doppler sensor;* *4 - base of mine (team control – decision – making);* *5 -stabilizers.*
 Mine AHM-100 .	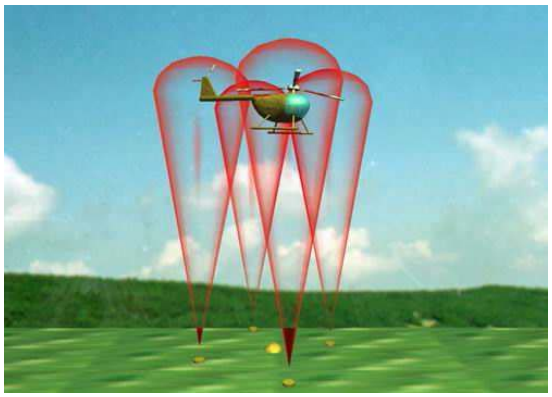 *Schematic action against helicopter mines 4AHM-100 (FIELD OF DESTRUCTION)*

FWP Ammunition

122

AMMUNITION FAMILY ALM

AMMUNITION TYPE	*Aerial Bomb*
DESIGNATION	*in a Metal Body*
NAME/ASSIGNED MARK (original)	***AO-1SCh***
COUNTRY of ORIGIN	*Former USSR*

AO-1SCh	
total weight of bomb with detonators and transport safety device [*kg*]	*0.99*
explosive type	*A-IX-2*
weight of explosive [*kg*]	*0.41*
diameter (mm)	*48,5 – 51*
height of body (mm)	*182 – 188*
dimension of pressure plate [*mm*]	
activation force (greater than) [*N*]	
effect of bomb	
type of fuze	*Impact AM-AB / U*
type of additional (anti-lift) fuze	

PACKING

Number of rounds in the package		**Weight of full package [*kg*]**	

DESCRIPTION

Fragmentation aerial bomb AO-1SCh was developed and produced in former USSR. Bomb is designated for the destruction of manpower and vehicles. Bomb has steel body and impact fuze type AM-AB/U. Bomb is used mainly like sumbmunition in cluster bombs or container like e.g.. RBK 250 -275 from that are the bombs expelled.

COLOR and MARKING

Body colour:	*green*
Text colour:	*black*

FUZE

Type	**Characteristic**
AM-AB/U	*Mechanical, contact, impact*

SAFETY CONSIDERATION THREAT

Simple removal of submunition is very dangerous: Do not touch, move or roll.

NOTICE

Unexploded bomb to be destroyed on the site only.

DRAWINGS/CUTAWAY/MARKING/STENCILING:

cross-section of bomb AO-1SCh
the fuze AM-AB / U

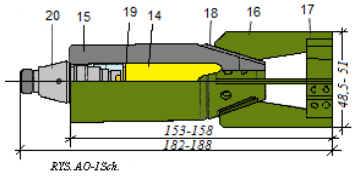

the fuse head before impact and after breaking

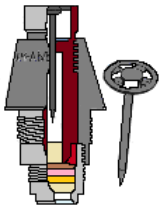

diagram the fuse AM-AB / U (the side of the spire)

LEGEND

1- Impact fuze AM-AB / U; 2 - place for wrench to assembly; 3 marking the name of the fuze ; 4 marking the manufacturer; 5-fuze transportation cap; 6 - marking the lot and year manufacture; 7-marking the name of bomb; 9-marking the explosive; 10- marking the year of stabilizer manufacture; 12 marking the lot of stabilizer manufacture; 13- marking the stabilizer control ; 14-explosive charge; 15-bomb´s body; 16-stabilizer ; 17 – reinforcing stabilizer´s ring; 19 - circle from cardboard; 20 - body of the fuze.

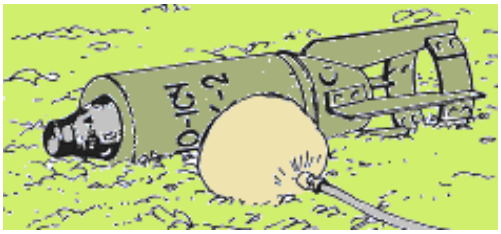

Place explosive. During the destruction of bomb AO-1Sch.

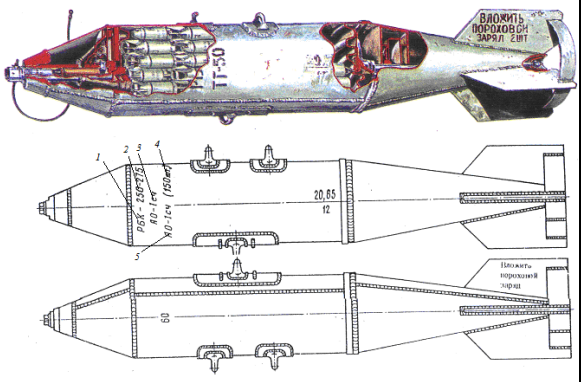

cluster bomb RBK-250 -275 AO-1Sch

Description the cluster bomb

1 marking the name of the bomb;
2 marking the bomb weight
3 marking the type of submunition ;
4 marking the type of submunition s and their number.

Cluster bomb RBK-250-275 with AO-1SCh.

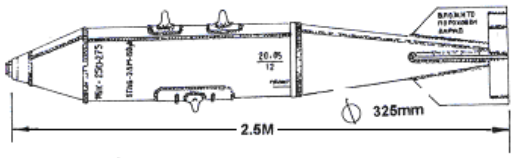

Designed like cluster bomb with AO-1Sch. Weight - 250 to 275 kg; Fuze type ATM-EB or AVU-E (electromechanical). The opening of the cluster is adjusted in the range 0.075 -5.5 seconds of delay from the time of fuze activation.

FWP Ammunition

123

AMMUNITION FAMILY ALM

AMMUNITION TYPE	*Aerial Bomb*
DESIGNATION	*Fragmentation Aerial Bomb – Submunition in a Metal Body*
NAME/ASSIGNED MARK (original)	***AO-2,5 (AO-2,5M) and AM-3M***
COUNTRY of ORIGIN	*Former USSR*

AO-2,5 (AO-2,5M) and AM-3M	
total weight of bomb with detonators and transport safety device [*kg*]	*2.8 (AO-2,5 M - 2,5)*
explosive type	*TNT*
weight of explosive [*kg*]	*0.200*
diameter [mm]	*52*
height of body [mm]	*210*
dimension of pressure plate [*mm*]	
activation force (greater than) [*N*]	
effect of bomb	*Fragmentation - up to 25 m*
type of central fuze	*impact AM-A, AGM-1; AGM- 3; AV-4.*
type of additional (anti-lift) fuze	

PACKING			
Number of rounds in the package		**Weight of full package [*kg*]**	

DESCRIPTION

Fragmentation aerial bombs – submunition AO-2.5, AO-2.5M, AM-3M were developed and produced in former USSR. Bombs are designated for the destruction of manpower and vehicles. Bombs have steel body and impact fuze type AM-AB / U. Bombs are used mainly like submunition in cluster bombs or container like e.g. RBK 250 -275. Air bomb AO- 2.5 (AO-2.5M) is a developed version of an air bomb AO used the first time in a massive scale during the Soviet - Finnish war in 1939. Type AO-2.5 was developed in 1941 and the version AO- 2.5M in 1943. Bombs have the fuze AM-A. Possible using of the fuzes AGM-1; AGM- 3 and AV-4. The difference between the bombs AO-2.5 and AO-2.5M is small. Reduced weight of the bomb AO-2.5 to 2.5 kg.

COLOR and MARKING

Body colour:	*green*
Text colour:	*black*

FUZE

Type	**Characteristic**
AM-A	*Impact, contact, mechanical*
AGM-1; AGM- 3; AV-4.	*Impact, contact, mechanical*

SAFETY CONSIDERATION THREAT

Simple removal of bomb is very dangerous: Destroy unexploded ordnance at the place.

NOTICE

Bombs of this type, despite their age are still service of many countries, min. Russian Federation, Egypt, Vietnam, Iraq and Syria.

DRAWINGS/CUTAWAY/MARKING/STENCILING:		LEGEND
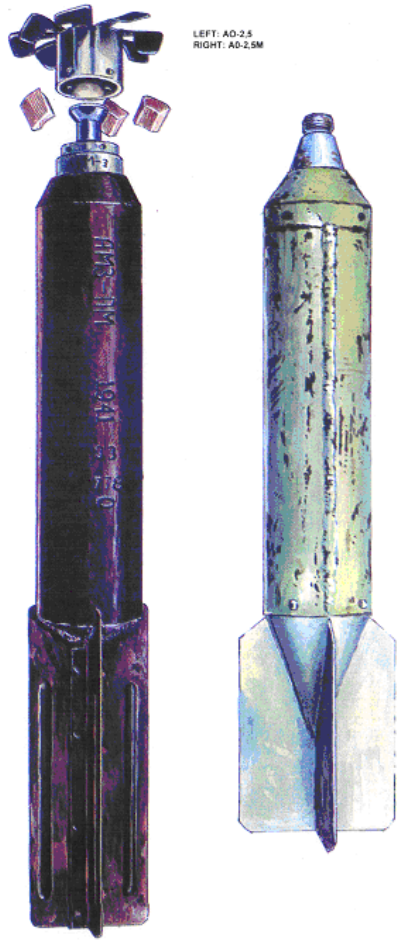	Fuze AGM-1	*1- Impact fuze; 2 bomb body; 3 - marking the type of bomb ; 5-marking the manufacturer of bomb; 6-marking the lot of bomb manufacture; 7-marking the bomb control ; 8-stabilizer ; 9-reinforcements the stabilizer´s fins ; 10-conecting the fins to stabilizer*
		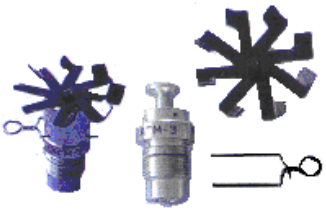 *fuze AGM-3*
	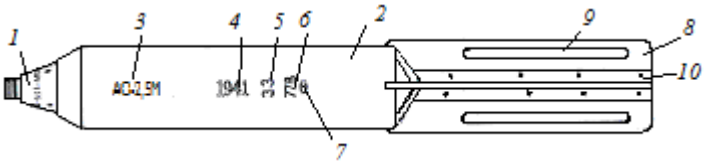 *Marking the bombs AO-2,5 (AO-2,5M) ; AM-3M*	
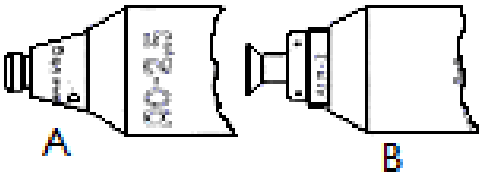 *A - bomb with the fuze AGM-1* *B - bomb with the fuze AGM-3*		

FWP Ammunition

124

AMMUNITION FAMILY ALM

AMMUNITION TYPE	*Aerial Bomb*
DESIGNATION	*Aerial Fragmentation Bomb - Submunition in a Metal Body*
NAME/ASSIGNED MARK (original)	***AO-10-6,5***
COUNTRY of ORIGIN	*USSR*

AO-10 - 6,5

total weight of bomb with detonators and transport safety device [*kg*]	*7*
explosive type	*K 2 (80% TNT; 20% nitrobenzene)*
weight of explosive [*kg*]	*0.523*
diameter [mm]	*76.2*
diameter stabilizers [mm]	*97*
height of body [mm]	*307*
dimension of pressure plate [*mm*]	
activation force (greater than) [*N*]	
effect of bomb	*Fragmentation to 25 m; Penetration - about 5 mm RHA*
type of fuze	*AT-90 (the detonator: Amotol -90% nitroglycerin dissolved in TNT ironed -10%) AM-A; AGM-1; AGM- 3; AV-4*
type of additional (anti-lift) fuze	

PACKING

Number of rounds in the package		**Weight of full package [*kg*]**	

DESCRIPTION

Aerial fragmentation bomb – submunition AO-10- 6.5 was developed and produced in former USSR. The bomb is designed for the destruction of manpower and lightly armored combat vehicles. Dropped from aircraft using the fuze as the AM-A or using containers O-350A or RBK-250.

COLOR and MARKING

Body colour:	*dark gray*
Text colour:	*black*

FUZE

Type	**Characteristic**
AT-90	*Impact, mechanical, contact*
AM-A; AGM-1; AGM- 3; AV-4.	*Impact, mechanical, contact*

SAFETY CONSIDERATION THREAT

Simple removal of bomb is very dangerous. Destroy unexploded ordnance at the site. In exceptional cases, the bomb can be gently transported.

NOTICE

Used by the Russian Federation, China, North Vietnam.

DRAWINGS/CUTAWAY/MARKING/STENCILING:		LEGEND
	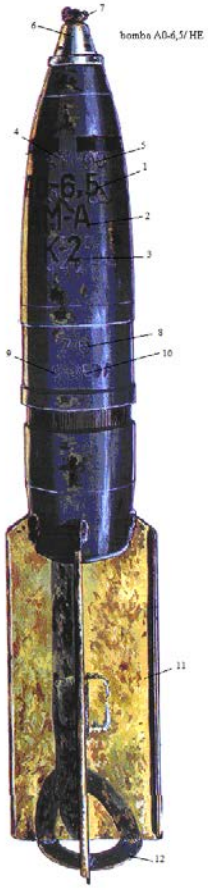	*1- marking the name of bomb; 2 marking used fuze ; 3 marking used explosive; 4 - marking stamped serial number and year of the bomb body manufacture; 8 - marking the year of bomb filling 9 – marking the lot of explosive manufacture; 10 - marking the year of an explosive manufacture; 11-stabilizer; 12 - reinforcing ring; 13-pinwheel; 14-striker ; 16- fuze body; 17-booster; 18 - index- the name of fuze.*
		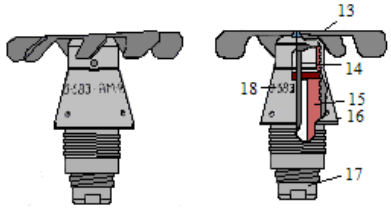 *fuze AM-A*
		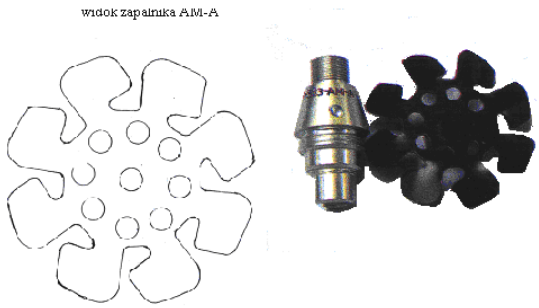 *fuze AM-A*

FWP Ammunition

125

AMMUNITION FAMILY ALM

AMMUNITION TYPE	*Aerial Submunition*
DESIGNATION	*Aerial Fragmentation Submunition in a Metal Body*
NAME/ASSIGNED MARK (original)	***PROSAB -1***
COUNTRY of ORIGIN	*Former USSR*

PROSAB-1	
total weight of submunition with detonators and transport safety device [*kg*]	*1.5*
explosive type	*TNT /A-IX-2*
weight of explosive [*kg*]	*1.2*
diameter [mm]	*64*
height of body [mm]	*84*
dimension of pressure plate [*mm*]	
activation force (greater than) [*N*]	
effect of submunition	*Fragmentation to 25m*
type of fuze	*AM-A time delay fuze*
type of additional (anti-lift) fuze	

PACKING

Number of rounds in the package		**Weight of full package [*kg*]**	

DESCRIPTION

Aerial fragmentation submunition PROSAB-1 was developed and produced in former USSR. The submunition has cylindrical shape, metal body, main charge and time delay fuze placed centrally on the upper side. While being dispersed the fuze is initiated and after delay time (after burning the pyrotechnic mixture) fuze initiates the detonator. The submunition is carrying in containers of aerial cluster bomb PROSAB-250, containing 90 PROSAB-1 submunition.

COLOR and MARKING

Body colour:	*green*
Text colour:	*no*

FUZE

Type	**Characteristic**
AMA	*contact, mechanical, pressure*

SAFETY CONSIDERATION THREAT

Simple removal of submunition is very dangerous.

NOTICE

DRAWINGS/CUTAWAY/MARKING/STENCILING:		LEGEND
submunition PROSAB		*1 –submunition body ;* *2 - explosive charge* *3 - fuze well* *4 - booster;* *5 - mounting slot for the key.*
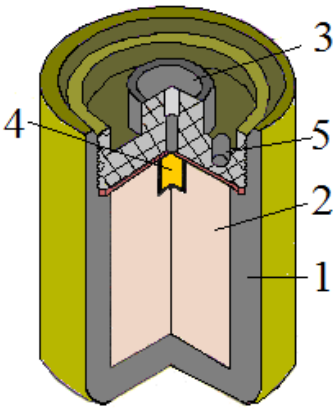 *cross section of submunition PROSAB-1*	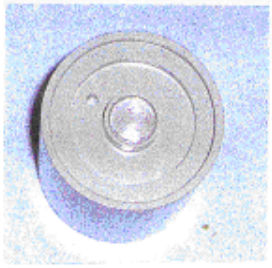 *view from the top submunition PROSAB-1*	*Container - aerial cluster bomb PROSAB -250 PROSAB -250 (cluster bombs-250) production USSR. The container deck developed in 1950. PROSAB-250 is a hollow case containing 90 unguided submunition – PROSAB-1.*

FWP Ammunition

126

AMMUNITION FAMILY ALM

AMMUNITION TYPE	*Aerial bomb - Submunition*
DESIGNATION	*Aerial Shaped Charge Bomb-Submunition in a Metal Body*
NAME/ASSIGNED MARK (original)	***PTAB-1M***
COUNTRY of ORIGIN	*Former USSR*

PTAB-1M

total weight of bomb with detonators and transport safety device [*kg*]	*0.944*
explosive type	*RDX/TNT*
weight of explosive [*kg*]	*0.453*
diameter [mm]	*42*
height of the body [mm]	
dimension of pressure plate [*mm*]	
activation force (greater than) [*N*]	*260*
effect of bomb	*Penetration up to 75 mm RHA*
type of fuze	*AB-1*
type of additional (anti-lift) fuze	

PACKING

Number of rounds in the package		**Weight of full package [*kg*]**	

DESCRIPTION

The aerial shaped charge bomb – submunition PTAB-1M was developed and produced in former USSR. The PTAB-1M (ПТАБ-1М) is HEAT (High Explosive Anti-Tank) submunition. The submunition is normally dispensed from the RBK-500 cluster bomb (container), which contains 268 pcs of these submunition. The submunition uses a base-detonating (inertia impact) self- destruct fuze. The self-destruct time, should activated explosive charge after the fuze fail to function on impact and is from 20 to 40 seconds. The submunition steel body is a cylindrical shape. The tail unit consists of interlocking sections, which opens spring when the submunition is ejected from the cluster bomb and disengage the safety devices within the fuze. The fuze arms as the fins spring open, releasing blocking pins which prevent the fuze from functioning.

COLOR and MARKING

Body colour:	*green*
Text colour:	*Black*

FUZE

Type	**Characteristic**
AB-1	*Mechanical, impact, the system of self-destruction*

SAFETY CONSIDERATION THREAT

Simple removal of submunition is very dangerous. Destroy unexploded ordnance on the site, do not touch, lift or move.

NOTICE

DRAWINGS/CUTAWAY/MARKING/STENCILING:		LEGEND
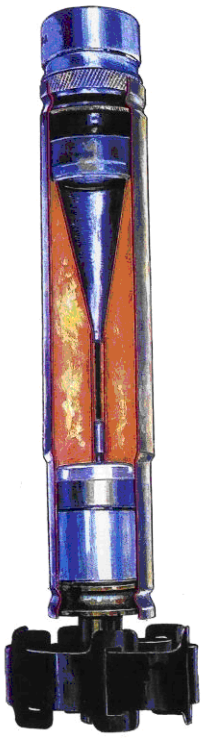 *cross-section bomb PTAB-1M*	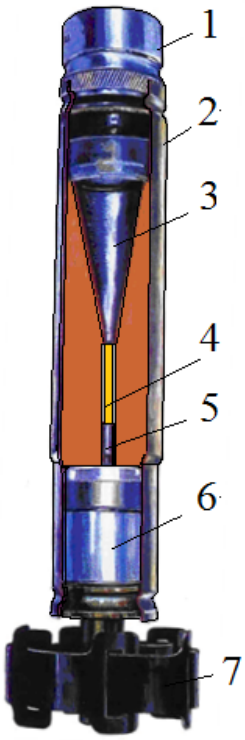 *cross-section bomb PTAB-1M*	*1 – self-destruction mechanism; 2 - submunition body; 3 - shaped charge liner; 4 – booster charge; 5 - detonator; 6-AB-1 fuze; 7 - fins with fins spring.* 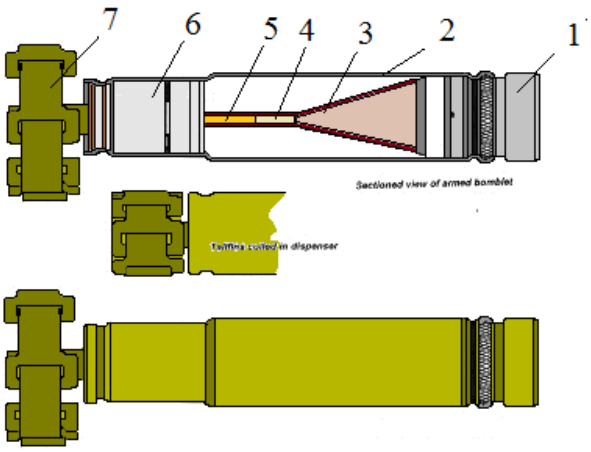 *drawings bomb PTAB-1M* 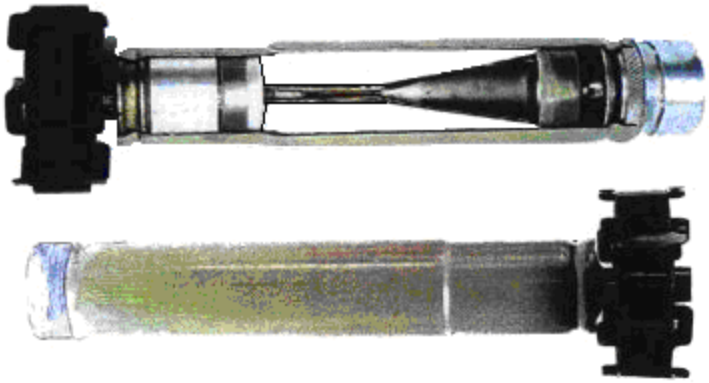 *sectional bomb PTAB-1M*

FWP Ammunition

127

AMMUNITION FAMILY ALM

AMMUNITION TYPE	*Aerial bomb - Submunition*
DESIGNATION	*Aerial Shaped Charge Dual Purpose Bomb - Submunition in a Metal Body*
NAME/ASSIGNED MARK (original)	***PTAB-2,5 KO***
COUNTRY of ORIGIN	*Former USSR*

PTAB-2,5KO

total weight of bomb with detonators and transport safety device [*kg*]	*2.5*
explosive type	*GEKFOL-5 (RDX/TNT)*
weight of explosive [*kg*]	*0.250*
diameter.[mm]	*59*
height of body [mm]	*296*
dimension of pressure plate [*mm*]	
activation force (greater than) [*N*]	
effect of bomb	*penetration up to 100 mm RHA*
type of fuze	*B-176 delay 7-10 seconds.*
type of additional (anti-lift) fuze	

PACKING

Number of rounds in the package		**Weight of full package [*kg*]**	

DESCRIPTION

The aerial shaped charge bomb – submunition PTAB-2.5KO was developed and produced in former USSR. The submunition has both an anti-tank and an anti-personnel capability (DP-dual purpose), and a self-destruction after impact mechanism. The submunition has six spring deployed fins and an arming impellor. Once an armed inertia striker initiates the detonator, which should explode the main charge, if this fails a short pyrotechnic delay detonates the submunition in 7 to 10 seconds. The GEKFOL-5 charge of RDX, TNT and Aluminum mix has a wave shaper block to compress the plasma jet for maximum penetration. The section of the body surrounding the charge is externally grooved to produce a large number of fragmentations. In the cluster bomb RBK 500 is 75 pcs PTAB-2.5KO.

COLOR and MARKING

Body colour:	*green*
Text colour:	*Black*

FUZE

Type	**Characteristic**
B-176	*integrated with the aerial submunition, mechanical, inertial delay element.*

SAFETY CONSIDERATION THREAT

Simple removal of submunition is very dangerous. Destroy unexploded ordnance on the site, do not touch, lift or move.

NOTICE

DRAWINGS/CUTAWAY/MARKING/STENCILING:	LEGEND
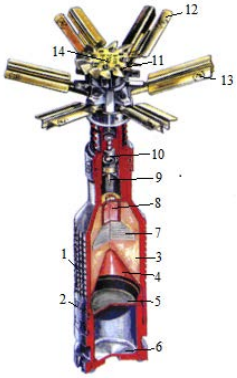 *cross-section of bomb PTAB-2,5KO*	*1 –bomb body ; 2- marking - description of mine; 3 - explosive charge; 4- shaped charge liner; 5-membrane; 6 –base part of bomb-magnetic; 7- wave shaper block 8-booster; 9-striker, 10 - inertial fuze mechanism; 11-arming vane; 12-stabilizer fin; 13- control sign of stabilizer fins; 14-marking a description of the fuze; 15- marking the arming vane - the year; 16-marking - type material; 17 - marking - symbol; 18 - character control fuze ; 19 -marking the name of fuze; 20 – marking number of the manufacturer; 21- marking lot of fuze manufacture; 22 –marking the year of fuze manufacture; 23 - control character body of bomb; 24 marking the - name of bomb; 25-marking the type of bomb; 26 - marking the bomb body manufacturer; 27- marking a variety of alloy bomb body; 28 - marking metal body - aluminum; 29 - marking designation of shaped charge liner; 30 - lot of manufacture the body of bomb; 31-year body of bomb manufacture; 32 - control character manufacturing; 33-marking a lot of explosive charge manufacture; 34 –marking year of submunition body manufacture 35 - year of explosive charge manufacture; 36 - marking the type of explosive charge.*
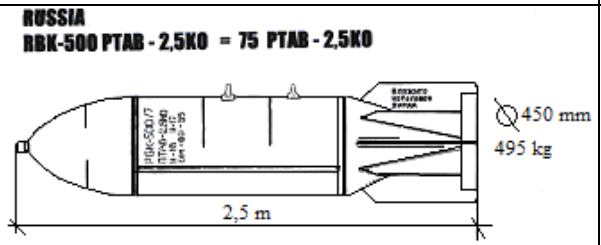 *Container bomb RBK – 500 PTAB-2,5KO*	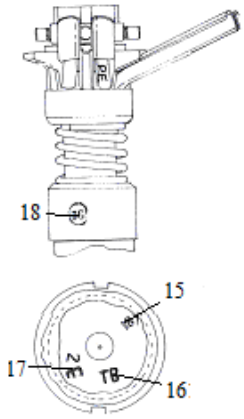 *description pads under heat sink.*
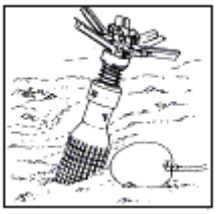 *place of relief material explosive charge*	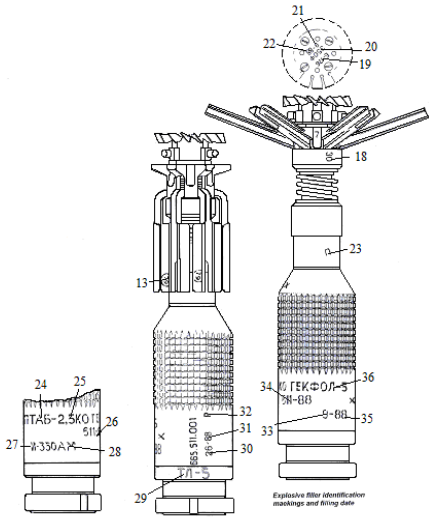 *marking of the submunition PTAB-2,5KO*

FWP Ammunition

128

AMMUNITION FAMILY ALM

AMMUNITION TYPE	*Aerial Bomb - Submunition*
DESIGNATION	*Aerial Shaped Charge Bomb -Submunition in a Metal Body*
NAME/ASSIGNED MARK (original)	***PTAB-1,5***
COUNTRY of ORIGIN	*Former USSR*

PTAB-1,5	
total weight of bomb with detonators and transport safety device [*kg*]	1.5
explosive type	(RDX/TNT 60/40)
weight of explosive [*kg*]	0.6
diameter[mm]	67
height of body [*mm*]	396
dimension of pressure plate [*mm*]	
activation force (greater than) [*N*]	
effect of bomb	*Penetration up to 75 mm RHA*
type of central fuze	*AM-A*
possible application of the fuze	

PACKING

Number of rounds in the package		**Weight of full package [*kg*]**	

DESCRIPTION

Aerial shaped charge bomb PTAM -1.5 –submunition was developed and produced in former USSR. The PTAB 1.5 (ПТАБ-1.5) is an old pattern HEAT submunition, which has a direct impact fuze initiating a detonator and booster in the base of the explosive charge. The fuze is vane armed, the submunition is cylindrical shape and has four fixed fins. This submunition is normally dispensed from the RBK 250 and RBK 500 tail expelling cluster bomb. The body of submunition is from aluminum, coated with a thin protective layer of plastic mass. Possible long term storage in bad weather.

COLOR and MARKING

Body colour:	*gray with red stripe*
Text colour:	*black*

FUZE

Type	**Characteristic**
AM-A	*Contact, Impact*

SAFETY CONSIDERATION THREAT

Simple removal of submunition is very dangerous. Destroy unexploded ordnance on the site, do not touch, lift or move.

NOTICE

Used to destroy airfields, troops assembly areas, parks stationary equipment. Dangerous after arming. "Sensitive" to shocks.

DRAWINGS/CUTAWAY/MARKING/STENCILING:		LEGEND
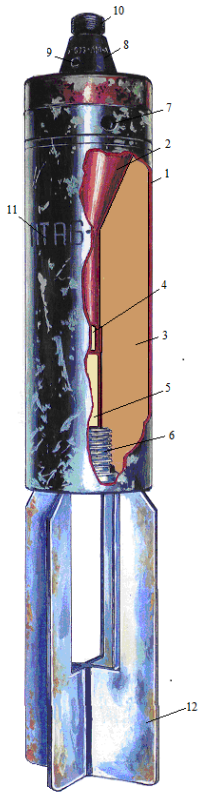	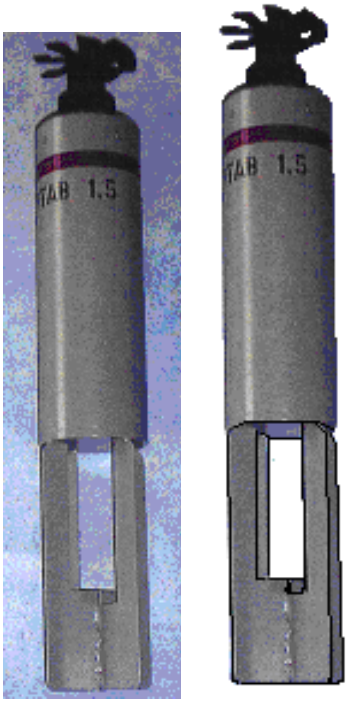	*1 – body of bomb; 2 shaped charge liner; 3 explosive charge; 4 – booster charge; 5-detonator; 6-stabilizer thread; 7 - mounting ring; 8-fuze; 9-slot for the key assembly; 10- transport cap; 11-marking – the name of bomb; 12- stabilizer; 13-arming vane; 14-striker; 15 - striker spring; 16-fuze body; 17-primer; 18-marking description of fuze (name).* 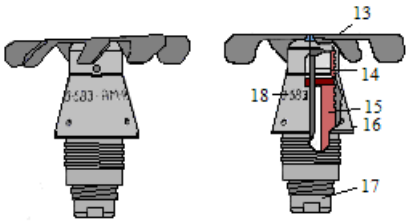 *Fuze AM-A* 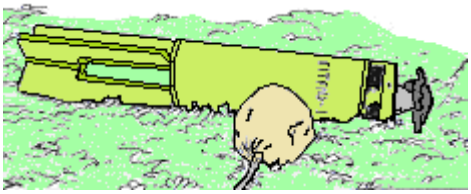 *Place flank explosive charge*

FWP Ammunition

129

AMMUNITION FAMILY ALM

AMMUNITION TYPE	*Aerial bomb - Submunition*
DESIGNATION	*Aerial Shaped Charge Bomb-Submunition in a Metal Body*
NAME/ASSIGNED MARK (original)	***PTAB-2,5***
COUNTRY of ORIGIN	*Former USSR*

PTAB-2,5	
total weight of bomb with detonators and transport safety device [*kg*]	*2.5*
explosive type	*(RDX/TNT 70/30)*
weight of explosive [*kg*]	*1.1*
diameter [mm]	*60*
height of body [*mm*]	*356*
dimension of pressure plate [*mm*]	
activation force (greater than) [*N*]	
effect of bomb	*penetration up to 30 mm RHA*
type of central fuze	*ADC, AAC-503*
type of additional (anti-lift) fuze	

PACKING

Number of rounds in the package		**Weight of full package [*kg*]**	

DESCRIPTION

Aerial shaped charge bomb – submunition PTAB-2.5 was developed and produced in former USSR. Submunition has metal body, shaped explosive charge, base fuze and stabilizer with four fins. The bomb was very effective during II. World war and other conflicts. This bomb used mainly like submunition normally dispensed from the RBK 250 / PTAB- 2.5 (30 pcs.) and RBK 500/PRAB-2.5, tail expelling cluster bombs.

COLOR and MARKING

Body colour:	*Green (dark gray)*
Text colour:	*Black*

FUZE

Type	**Characteristic**
AAC -503	*mechanical, vane, inertia.*
ADC	*mechanical, contact, impact*

SAFETY CONSIDERATION THREAT

Simple removal of bomb is very dangerous. Destroy unexploded ordnance on the site, do not touch, lift or move.

NOTICE

Used for the destruction of large areas, airports and troop's assembly areas.

DRAWINGS/CUTAWAY/MARKING/STENCILING:		LEGEND
bomb PTAB- 2,5 AT		*1-marking the bomb name ; 2 marking the fuze type; 3 – marking the type of explosive; 4 marking the year of bomb manufacture; 5-marking the bomb manufacturer.; 6-stabilizer; 7-shaped charge liner ; 8 -front part of bomb; 9 -plug; 10 -explosive charge; 11 -booster; 12 -connection the bomb with stabilizer; 13 -fuze AAC-503; 14 -arming vane; 15 - protective ring ; 18, 19 -striker; 20 -striker spring; 21 -detonator; 22 -booster; 23-slot for the key; 24-fuze transport safety;* 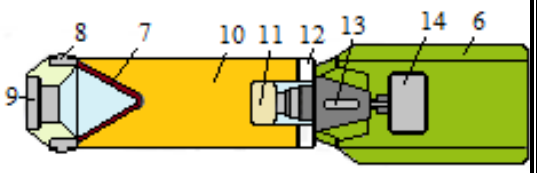 *drawing the bomb PTAB- 2,5 AT* 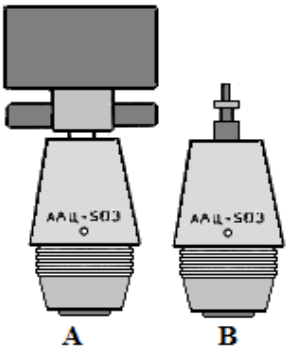 *fuze AAC-503*

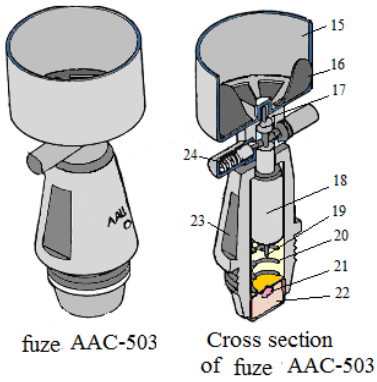

fuze AAC-503

FWP Ammunition

130

AMMUNITION FAMILY SLM

AMMUNITION TYPE	*Submunition*
DESIGNATION	*Fragmentation Submunition in a Metal Body*
NAME/ASSIGNED MARK (original)	***9N235***
COUNTRY of ORIGIN	*Former USSR*

9N235 FRAG/HE AP/AM

total weight of submunition with detonators and transport safety device [*kg*]	*1.8*
explosive type	*A-IX-II (RDX/TNT 70/30)*
weight of explosive [*kg*]	*0.313*
diameter[mm]	*66.6*
height of body [*mm*]	*264.28*
dimension of pressure plate [*mm*]	
activation force (greater than) [*N*]	
effect of submunition	*Fragmentation up to 10 m;*
type of fuze	*AM-AB/U-2,*
type of additional (anti-lift) fuze	

PACKING

Number of rounds in the crate		**Weight of full crate [*kg*]**	

DESCRIPTION

The fragmentation submunition 9N235 was developed and produced in former USSR. The submunition (72 pcs.) is used in 300 mm 9M55K rockets. The 9N235 is a high explosive fragmentation submunition (9N indicating artillery submunition) with a double skinned body containing preformed fragments of two sizes. The bomblet has a nose (PD) direct impact fuze with 2 min self-destruction timing. The submunition contains 396 chopped steel rod pre-formed fragments between the inner and outer bomblet casings held within a thick black plastic liner. Two sizes of chopped steel rod are found in the submunition, the smaller size (300 pcs. of 0.5g) being mainly use against personnel and the larger size (96 pcs. of 4.5g) use against lightly armoured vehicles or material. The 9N235 is externally identical to the 9N210.

COLOR and MARKING

Body colour:	*gray (color aluminum).*
Text colour:	*black*

FUZE

Type	**Characteristic**
AM-AB/U-2,	*Impact, mechanism suppression electronic timer.*

SAFETY CONSIDERATION THREAT

Simple removal of submunition is very dangerous. Destroy unexploded ordnance on the site, do not touch, lift or move.

NOTICE

Destruction mechanism is activated for detonation of the submunition about 2 minutes after hit an obstacle (ground). Bursts during actuation of the electromagnetic field.

DRAWINGS/CUTAWAY/MARKING/STENCILING:		LEGEND
submunition 9N235 FRAG / HE AP / AM	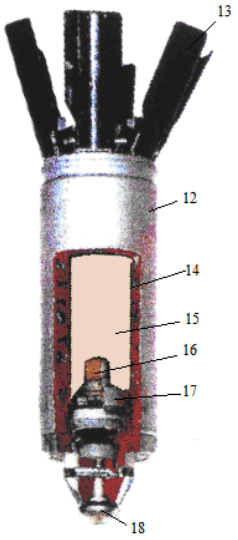	*1 -rocket engine; 2 -cassette with submunition 9N235; 3-expelling system; 4- rocket fuze , 5 - stabilizer; 6-rubber cover for the fuze; 7-power element; 8-marking the impact fuze control mechanism; 9-slot for the key assembly; 10 – marking sign control mechanism of power; 11-character control of all the detonators; 12 submunition´s body; 13-stabilizer´s fins; 14-fragments ; 15 - explosive charge; 16-booster; 17-band mechanism for power and electromagnetic field interference; 18-head shock fuze.*
		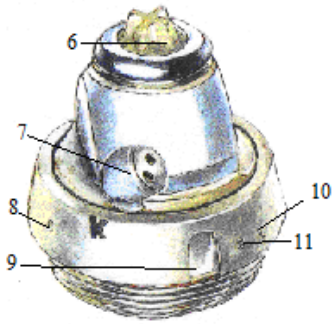 *Impact fuze AM-AB / U-2, integrated to 9N235*
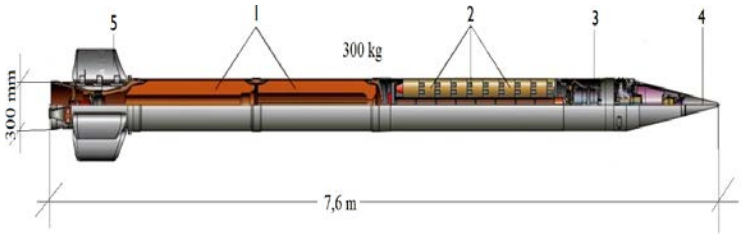 *Set rocket 9M55K of 72 submunition 9N235 M from the "Smercz"*		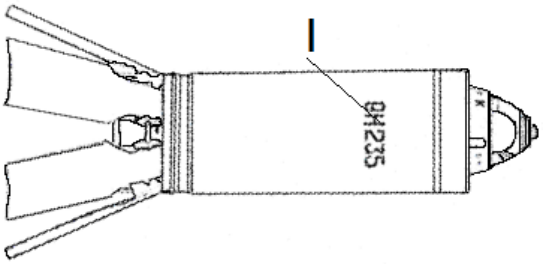 *description of submunition - 9N235; 1 index - the name of submunition*
		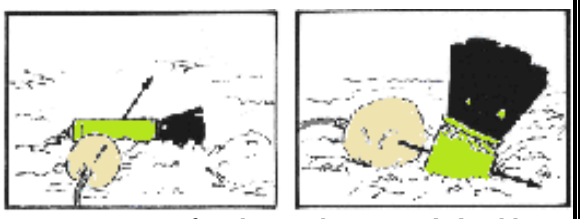 *TNT 200g of explosive charge needed to blow up the submunition (can be increased to 400 gr. TNT).*

FWP Ammunition

131

AMMUNITION FAMILY HEM

AMMUNITION TYPE	*Demolition Charge*
DESIGNATION	*Standardized Demolition Charge – 100 g in a Plastic Body*
NAME/ASSIGNED MARK (original)	***TM-100***
COUNTRY of ORIGIN	*Former YUGOSŁAVIA*

TM-100	
total weight of charge [*kg*]	*0.1*
explosive type	*TNT*
weight of explosive [*kg*]	*0.095*
diameter (mm)	*33*
height of body [*mm*]	*107*
dimension of pressure plate [*mm*]	
activation force (greater than) [*N*]	
effect of charge	
type of central fuze	*Possible UMP-1, UMNP-1, UMNOP -1 or other types of fuzes with detonator*
type of additional (anti-lift) fuze	

PACKING

Number of rounds in the package		**Weight of full package [*kg*]**	

DESCRIPTION

Standardized demolition charge TM-100 was developed and produced in former Yugoslavia. The demolition charge TM-100 was used during the Balkan conflict. Similar charges and rules for their application are in the service of many countries; Mine has fuze well for connection with detonators or some types of fuzes.

COLOR and MARKING

Body colour:	*green olive*
Text colour:	*Black*

FUZE

Type	**Characteristic**

SAFETY CONSIDERATION THREAT

Simple removal of charge can be very dangerous, depends on type of the fuze.

NOTICE

DRAWINGS/CUTAWAY/MARKING/STENCILING:		LEGEND
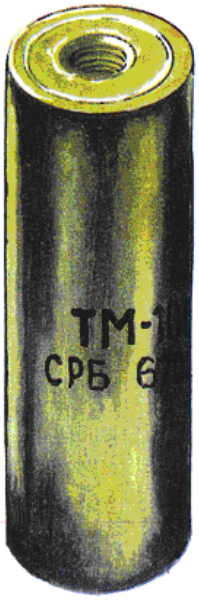 TM-100 *demolition charge TM-100*	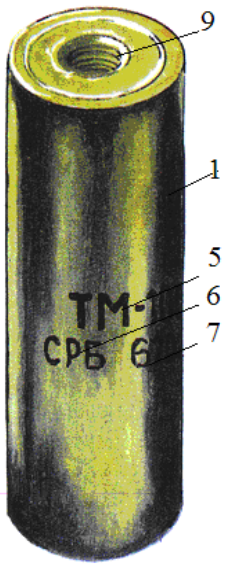 TM-100	*1 -body; 2- fuźe UMNOP-1; 3- lever of fuze; 4- safety pin; 5-marking the charge shipping name; 6- marking country of manufacture; 7- marking the year of manufacture; 8- marking manufacturer and a lot of manufacture; 9- fuze well.*
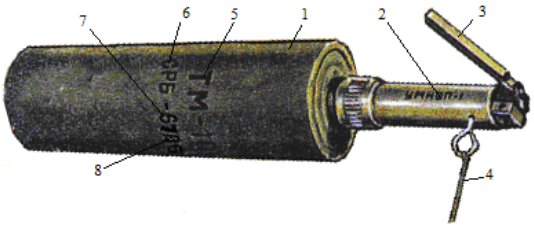 *demolition charge TM-100 as mine with fuze UMNOP-1*		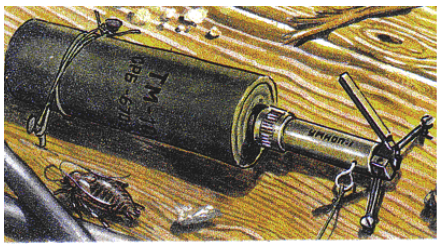 *demolition charge TM-100 as mine with fuze UMNOP-1*

FWP Ammunition

132

AMMUNITION FAMILY HEM

AMMUNITION TYPE	*Demolition Charge*
DESIGNATION	*Standardized Demolition Charge – 200 g in a Plastic Body*
NAME/ASSIGNED MARK (original)	***TM-200***
COUNTRY of ORIGIN	*Former YUGOSŁAVIA*

TM-200	
total weight of charge [*kg*]	*0.2*
explosive type	*TNT*
weight of explosive [*kg*]	*0.195*
width of body (mm)	*57*
length of body (mm)	*109*
height of body (mm)	*32*
dimension of pressure plate [*mm*]	
activation force (greater than) [*N*]	*depends on type of fuze*
effect of charge	
type of central fuze	*Possible UMP-1, UMNP-1, UMNOP -1*
type of additional (anti-lift) fuze	

PACKING

Number of rounds in the package		**Weight of full package [*kg*]**	

DESCRIPTION

Standardized demolition charge TM-200 was developed and produced in former Yugoslavia. The demolition charge TM-200 was used during the Balkan conflict. Similar charges and rules for their application are in the service of many countries; Mine has fuze well for connection with detonators or some types of fuzes.

COLOR and MARKING

Body colour:	*green olive*
Text colour:	*Black*

FUZE

Type	**Characteristic**

SAFETY CONSIDERATION THREAT

Simple removal of charge can be very dangerous, depends on type of the fuze.

NOTICE

DRAWINGS/CUTAWAY/MARKING/STENCILING:	LEGEND
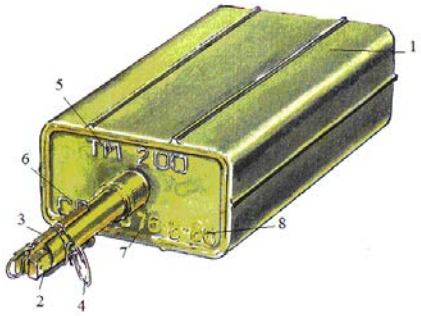 *demolition charge - TM-200 with fuze UMNOP -1*	*1 -body; 2- fuze UMNOP-1; 3 -lever of fuze; 4 – safety pin; 5-marking the charge shipping name; 6-marking country of production; 7-marking year of manufacture ; 8-marking manufacturer and a lot of manufacture;*
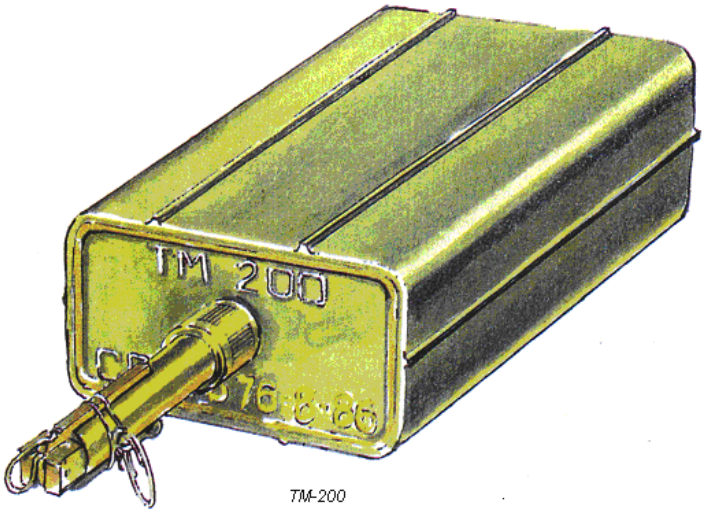 *demolition charge - TM-200*	 *Demolition charge - TM-200*

FWP Ammunition

133

AMMUNITION FAMILY HEM

AMMUNITION TYPE	*Demolition Charge*
DESIGNATION	*Standardized Demolition Charge – 500 g in a Plastic Body*
NAME/ASSIGNED MARK (original)	***TM-500***
COUNTRY of ORIGIN	*Former YUGOSŁAVIA*

TM-500	
total weight of charge [*kg*]	*0.5*
explosive type	*TNT*
weight of explosive [*kg*]	*0.495*
width of body (mm)	*70*
length of body (mm)	*108*
height of body (mm)	*57*
dimension of pressure plate [*mm*]	
activation force (greater than) [*N*]	*depends on type of fuze*
effect of charge	
type of fuze	*Possible UMP-1, UMNP-1, UMNOP -1*
type of additional (anti-lift) fuze	

PACKING

Number of rounds in the package		**Weight of full package [*kg*]**	

DESCRIPTION

Standardized demolition charge TM-500 was developed and produced in former Yugoslavia. The demolition charge TM-500 was used during the Balkan conflict. Similar charges and rules for their application are in the service of many countries; Mine has fuze well for connection with detonators or some types of fuzes.

COLOR and MARKING

Body colour:	*green olive*
Text colour:	*Black*

FUZE

Type	**Characteristic**

SAFETY CONSIDERATION THREAT

Simple removal of charge can be very dangerous, depends on type of the fuze.

NOTICE

DRAWINGS/CUTAWAY/MARKING/STENCILING:		LEGEND
 demolition charge TM-500	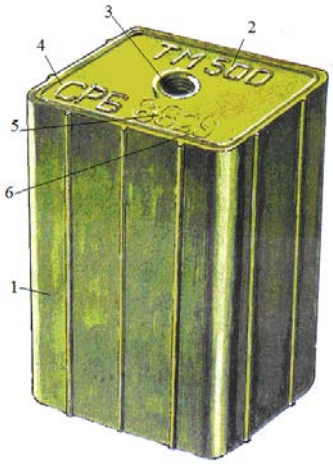 *demolition charge TM-500*	*1 -body; 2- marking the type of charge; 3 – fuze well; 4 –marking the country of manufacture; 5- marking the year of manufacture; 6-marking a lot of manufacture;*
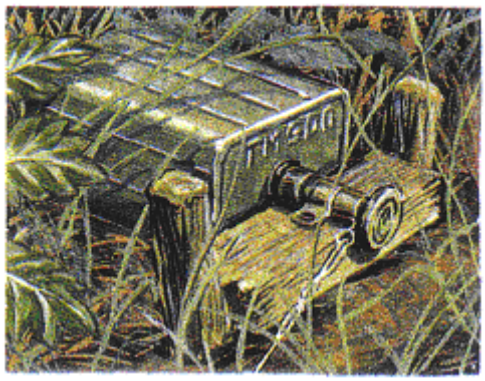 *demolition charge - TM-500*		

FWP Ammunition

134

AMMUNITION FAMILY SLM

AMMUNITION TYPE	*Artillery*
DESIGNATION	*Artillery Marker Projectile*
NAME/ASSIGNED MARK (original)	***130 mm 3DC1***
COUNTRY of ORIGIN	*Former USSR*

130 mm 3DC1; (130 mm DT-S-s)	
total weight of projectile with detonators and transport safety device [*kg*]	*33.6*
explosive type	*Bursting charge TNT+ TETRYL and smoke mixture (Phosphorus)*
weight of explosive [*kg*]	3.23
diameter [mm]	*130*
height of body [*mm*]	*673*
dimension of pressure plate [*mm*]	
activation force (greater than) [*N*]	
effect of projectile- to the width [*m*]	*Fragmentation up to 50 m*
type of fuze	*RGM-2, V-429*
type of additional (anti-lift) fuze	

PACKING

Number of rounds in the package	*1*	**Weight of full package [*kg*]**	*86*

DESCRIPTION

Artillery marker projectile 130 mm 3DC1 (marked on the body as DC1 only) was developed and produced in former USSR. Projectile was designated for 130 mm gun M-46. Projectile consists of steel body, fuze, bursting charge (pressed TNT + Tetryl), and smoke mixture charge (white phosphorus-P-4). The impact the fuze initiates the bursting charge and the smoke mixture is diffused to the neighborhood. Impact is visible up to 15 km in the good condition.

COLOR and MARKING

Body colour:	*grey with black and white band above the driving band .*
Text colour:	*black*

FUZE

Type	**Characteristic**
RGM-2, V 429	*Mechanical, contact ,impact*

SAFETY CONSIDERATION THREAT

Simple removal of projectile is very dangerous.

NOTICE

130 mm artillery projectile 3DC1 (shortly DC1) are officially designated as marker (smoke) projectile loaded with expelling charge and phosphorus.

DRAWINGS/CUTAWAY/MARKING/STENCILING:	LEGEND
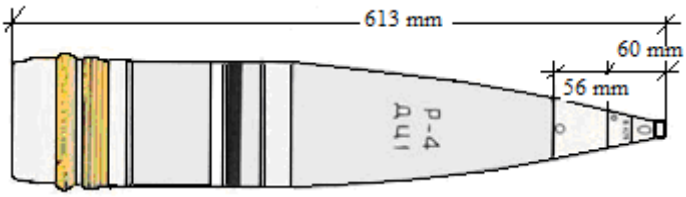 *130 mm artillery projectile 3DC1; (130 mm DT-S-s)*	*1- projectile body 2- bursting charge – TNT +Tetryl; 3- smoke mixture; 4- driving bands ; 5- cavity for filling the smoke mixture; 6- fuze; 7- booster.*
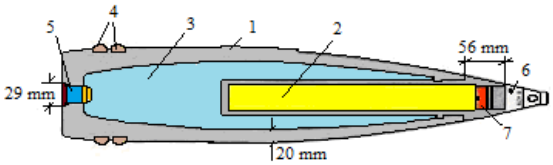 *Cross section of 130 mm artillery projectile 3DC1; (130 mm DT-S-s)*	 *130 mm artillery grenade 3DC1; (130 mm DT-S-s)*

FWP Ammunition

135

AMMUNITION FAMILY HEM

AMMUNITION TYPE	***Hand Grenade***
DESIGNATION	***Antitank Hand Grenade – Training in a Metal Body***
NAME/ASSIGNED MARK (original)	***UPG-8*** *(training)*
COUNTRY of ORIGIN	*Former USSR*

UPG-8

total weight of grenade with detonators and transport safety device [*kg*]	*1.007*
explosive type	*spotting charge*
weight of explosive [*kg*]	
diameter (mm)	*76*
height of body (mm)	*150*
dimension of pressure plate [*mm*]	
activation force (greater than) [*N*]	
effect of grenade	*no danger*
type of fuze	*handle, mechanical*
type of additional (anti-lift) fuze	

PACKING

Number of rounds in the package		**Weight of full package [*kg*]**	

DESCRIPTION

Anti-tank training hand grenade UPG-8 was developed and produced in former USSR. The grenade was designated for training purpose, especially for the fight against armored vehicles and tanks.UPG-8 is the training version of the RKG-3 and is designed to be re-usable. The body is made from heavy sheet metal with holes for gas escape - spotting charge. Used by the Red Army (Russia), Belarus, Ukraine, countries created after the collapse of the Soviet Union and the Middle East countries.

COLOR and MARKING

Body colour:	*Green olive (black)*
Text colour:	*white*

FUZE

Type	Characteristic
mechanical	*Mechanical, stabilizer*

SAFETY CONSIDERATION THREAT

NOTICE

no danger.

DRAWINGS/CUTAWAY/MARKING/STENCILING:	LEGEND
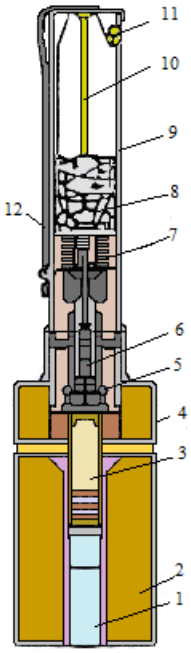 *cross section of UPG-8*	*1- the cavity for the smoke; 2- spotting charge; 3- training initiator ; 4 - body; 5-steel balls; 6-initiation mechanism; 7-spring; 8-stabilizer-parachute; 9- handle body; 10 - stranded connecting stabilizer; 11 - fuze spoons hook; 12- fuze spoon; 13 - marking - the grenade; 14 - marking the type of grenade 15-marking the lot of manufacture; 16- marking the year of manufacture ; 17 - body; 18 - handle; 19 - safety pin; 20 - fuze spoon.* *the cavity for smoke*
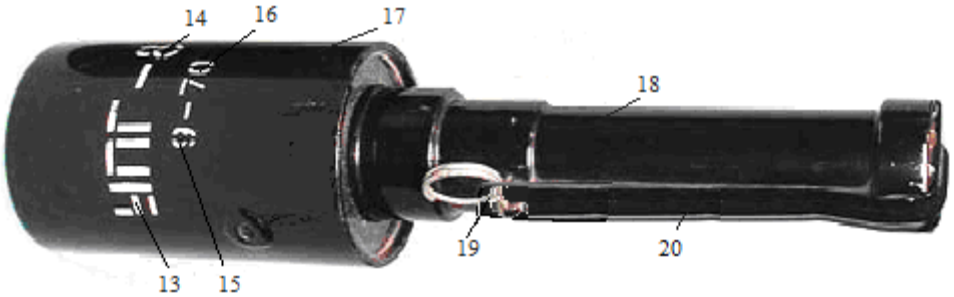 *Photo UPG-8*	

FWP Ammunition

136

AMMUNITION FAMILY HEM

FIELD of AMMUNITION	***Hand Grenade***
NAME	***Antitank Hand Grenade in a Metal Body***
NAME/ASSIGNED MARK (original)	***RPG-6***
COUNTRY of ORIGIN	*Former USSR*

RPG-6	
total weight of grenade with detonators and transport safety device [*kg*]	*1.1*
explosive type	*TNT*
weight of explosive [*kg*]	*0.570 (shaped charge)*
diameter (mm)	*103*
height of body (mm)	*117*
dimension of pressure plate [*mm*]	337
activation force (greater than) [*N*]	
effect of grenade	*Fragmentation up to 25 m* *penetration of 100 mm RHA*
type of fuze	*mechanical, percussion*
type of additional (anti-lift) fuze	

PACKING

Number of rounds in the package		**Weight of full package [*kg*]**	

DESCRIPTION

Anti-tank shaped charge hand grenade RPG-6 was developed and produced in former USSR. The RPG-6 was a Soviet-era anti-tank hand-grenade used during the late World War II and early Cold War period. It operated on the "Monroe effect" principle; a metal-lined cone-shaped charge explosive would generate a focused jet of hot metal that could penetrate through armor plate. It underwent testing in September 1943, and was accepted into service in October of the same year. It was a conical casing enclosing a shaped charge containing 562 grams of TNT, fitted with a percussion fuze and four cloth ribbons to provide stability in flight after throwing. It could penetrate approximately 100 millimeters of RHA. The RPG-6 had a fragmentation radius of 25 meters from the point of detonation, proved useful against infantry as well as tanks. The RPG-6 has added a hollow pointed nose section with the impact fuze, so that when the grenade detonated the warhead was at the optimum distance from the armour. Used in many countries.

COLOR and MARKING

Body colour:	*Green*
Text colour:	*Black*

FUZE

Type	**Characteristic**
mechanical	*Mechanical, contact, impact*

SAFETY CONSIDERATION THREAT

Simple removal of grenade is very dangerous

NOTICE

Degree of danger - high. Used grenades are dangerous. Do not lift, roll or slide.

DRAWINGS/CUTAWAY/MARKING/STENCILING:		LEGEND
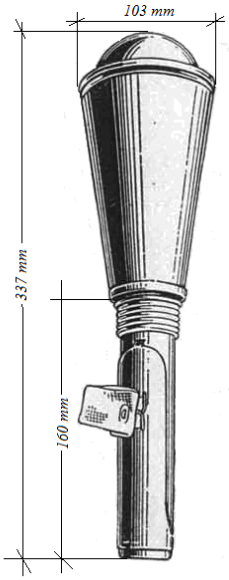 *Figure grenade RPG-6*	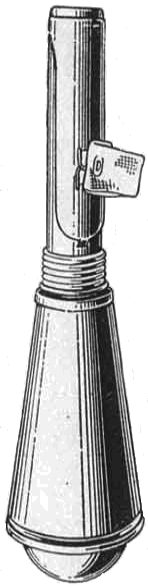 *Figure grenade RPG-6* 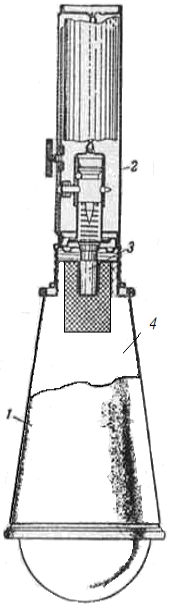 *BASIC ELEMENTS OF GRANATE HAND RPG-6* *1 -body; 2 -handle - fuse; 3 - detonator; 4 - charge explosive material*	*1 – connecting thread ; 5 – base cover; 6 – stabilizer string; 7- stabilizing parachute; 8 – handle´s body; 9 – parachute gripping; 10 - catch; 11-striker; 12 - striker sleeve; 13 – striker spring; 15 – detonator well; 16 - thread; 17- detonator well ; 18 - booster ; 19 - explosive charge; 20 - body; 21-hollow pointed nose* 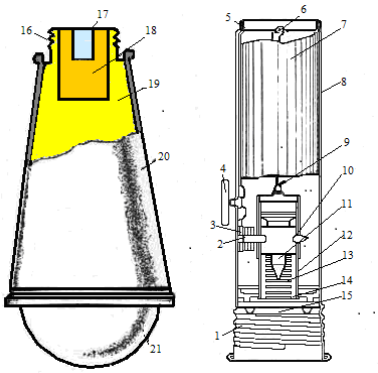 *Drawing the instructions of the Russian RPG-6*
 grenade RPG-6		*Drawing instructions Soviet Detonator* *SECTION* *VIEW* 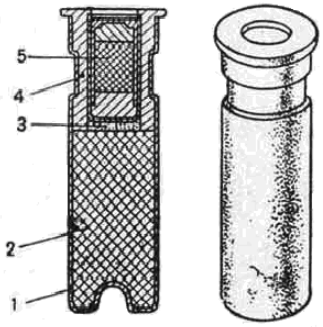 *1 - bushing; 2 - explosive charge; 3 - material initiating - tetryl; 4 - stenosis; 5-initiating material - mercury fulminate.*

FWP Ammunition

137

AMMUNITION FAMILY HEM

AMMUNITION TYPE	***Hand Grenade***
DESIGNATION	***Antitank Hand Grenade in a Metal Body***
NAME/ASSIGNED MARK (original)	***RPG-43***
COUNTRY of ORIGIN	*Former USSR*

total weight of grenade with detonators and transport safety device [*kg*]	*1.2*
explosive type	*TNT*
weight of explosive [*kg*]	*0.64 shaped charge*
diameter (mm)	*95*
height of body (mm)	*120*
dimension of pressure plate [*mm*]	
activation force (greater than) [*N*]	
effect of grenade	*fragmentation up to 25 m, penetration of 75 mm RHA*
type of fuze	*Mechanical, impact*
type of additional (anti-lift) fuze	

PACKING

Number of rounds in the package		**Weight of full package [*kg*]**	

DESCRIPTION

The antitank shaped charge hand grenade RPG-43 ("ruchnaya protivotankovaya granata" meaning "hand-held anti-tank grenade") was a high explosive shaped charge anti-tank (HEAT) hand grenade used by the Soviet Union during the Second World War. It entered into service in 1943, replacing the earlier model RPG-40. The RPG-43 used a shaped charge HEAT warhead, whereas the RPG-40 used the simpler HE (high explosive) warhead. The RPG-43 had a penetration of around 75 mm of RHA at a 90 degree angle. Later in the war, it was improved and became the RPG-6. When thrown, a cylindrical metal cone was released from the rear of the grenade and held by fabric strips to stabilize flight and increase the likelihood of a 90 degree hit. Its range was limited by how far the user could throw it.

COLOR and MARKING

Body colour:	*Green*
Text colour:	*Black*

FUZE

Type	**Characteristic**
mechanical	*Mechanical, contact*

SAFETY CONSIDERATION THREAT

Simple removal of grenade is very dangerous

NOTICE

Degree of danger - high. Used grenades are dangerous. Do not lift, roll or slide.

DRAWINGS/CUTAWAY/MARKING/STENCILING:		LEGEND
grenade RPG-43	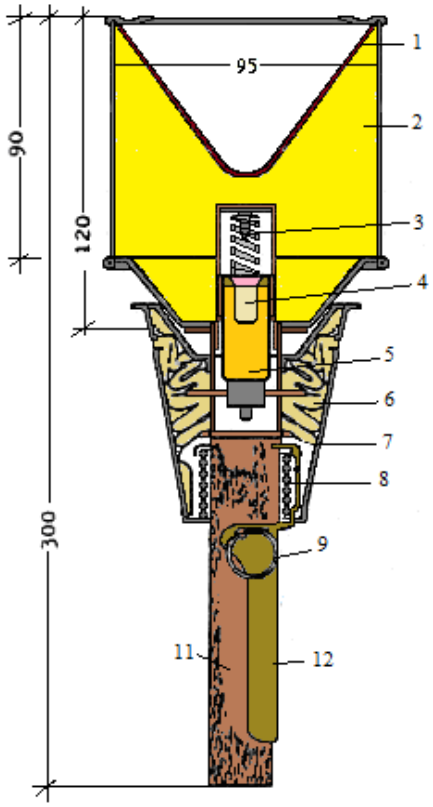 *cross section of grenade RPG-43*	*1-shaped charge liner; 2 -explosive charge; 3- striker with spring; 4 - detonator; 5-booster charge ; 6- stabilizer; 9 – safety pin; 12 - safety spoon.* *cross section of grenade RPG-43*
grenade RPG-43		

FWP Ammunition

138

AMMUNITION FAMILY HEM

AMMUNITION TYPE	***Hand Grenade***
DESIGNATION	***Antitank Hand Grenade in a Metal Body***
NAME/ASSIGNED MARK (original)	***AZ-58 –K- 100***
COUNTRY of ORIGIN	*EAST GERMANY*

AZ-58 –K- 100

total weight of grenade with detonators and transport safety device [*kg*]	*1.2*
explosive type	*TNT/A-IX-1*
weight of explosive [*kg*]	*0.62 (shaped charge)*
diameter (mm)	*95*
height of body (mm)	*166*
dimension of pressure plate [*mm*]	
activation force (greater than) [*N*]	
effect of grenade	*fragmentation up to 25 m, penetration of 150 mm RHA*
type of fuze	*mechanical, impact*
type of additional (anti-lift) fuze	

PACKING

Number of rounds in the package	*20*	**Weight of full package [*kg*]**	*32*

DESCRIPTION

Anti-tank shaped charge hand grenade AZ-58 - K 100 was produced in former East Germany. It was the version of USSR grenade RPG-6. This is a safety-pinned-armed, hand-thrown, drogue-stabilized, graze-sensitive, impact-inertia-fired, high-explosive antitank (HEAT) grenade. It may be employed against armoured vehicles or personnel.

COLOR and MARKING

Body colour:	*Green*
Text colour:	*Black*

FUZE

Type	**Characteristic**
mechanical	*Mechanical, contact, impact*

SAFETY CONSIDERATION THREAT

Simple removal of grenade is very dangerous

NOTICE

Degree of danger - high. Used grenades are dangerous. Do not lift, roll or slide.

DRAWINGS/CUTAWAY/MARKING/STENCILING:		LEGEND
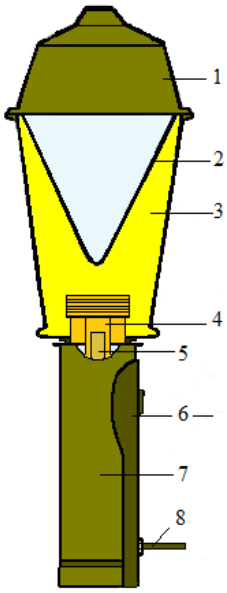 *cross-section of grenade AZ-58 –K- 100*	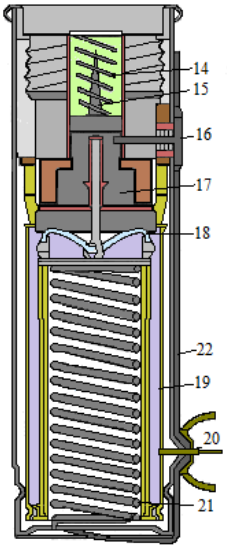 *cross section of the fuze for AZ-58 –K- 100*	*1 – Stand off cover; 2- shaped charge liner; 3 - explosive charge; 4 - booster and wave shaper; 5 - detonator; 6 – fuze spoon; 7- holder; 8 – safety pin 9 – marking type of grenade; 10 - marking the year of manufacture ; 11 - marking the manufacturer 12 - marking lot of manufacture; 13 - marking grenade manufacture country; 14 – striker spring; 15, 17 - striker; 18- string; 19 - stabilizer;*
grenade AZ-58 –K- 100		*view of the handle of grenade AZ-58 –K- 100*
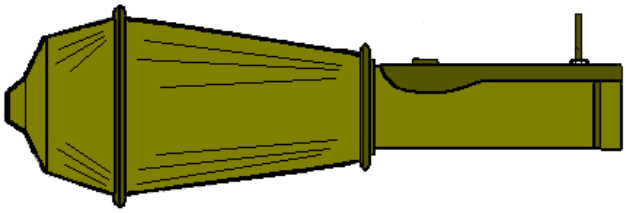 *figure grenade AZ-58 –K- 100*		*marking the grenade AZ-58 –K- 100*
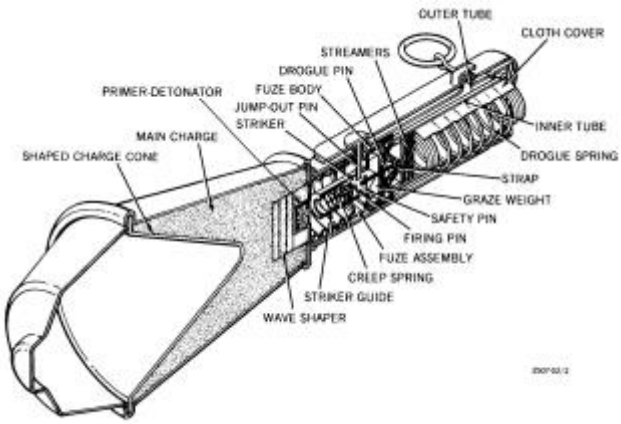		

FWP Ammunition

139

AMMUNITION FAMILY HEM

AMMUNITION TYPE	***Hand Grenade***
DESIGNATION	***Antitank Hand Grenade in a Metal Body***
NAME/ASSIGNED MARK (original)	***RKG -3***
COUNTRY of ORIGIN	*Former USSR*

total weight of grenade with detonators and transport safety device [*kg*]	*1.7*
explosive type	*TNT/RDX (50; 50 or 45 ;55)*
weight of explosive [*kg*]	*0.310 shaped charge*
diameter (mm)	*56*
height of body (mm)	*161*
dimension of pressure plate [*mm*]	*360*
activation force (greater than) [*N*]	
effect of grenade [*mm*]	*fragmentation up to 25 m, penetration up to 170 mm RHA*
type of fuze	*mechanical, impact*
type of additional (anti-lift) fuze	

PACKING

Number of rounds in the package	*12*	**Weight of full package [*kg*]**	*27*

DESCRIPTION

Anti-tank hand grenade with shaped charge RKG-3 was developed and produced in former USSR. It superseded the series of grenades RPG-43, RPG-40 and RPG-6. The grenade is designed to be used against combat armored vehicles. When the safety pin is pulled out, the grenade is thrown, and then a drogue parachute is pushed up by a spring. This parachute stabilizes the grenade during the flight and also ensures that the grenade strikes the target at a 90 degree angle. This maximizes the effect of the shaped charge. The antitank grenade was and still is in the use in many countries (imported or copied). The delicate fuze makes from this grenade a sensitive dud when is found in the field.

COLOR and MARKING

Body colour:	*Green*
Text colour:	*Black*

FUZE

Type	Characteristic
mechanical	*Mechanical, contact, impact*

SAFETY CONSIDERATION THREAT

Simple removal of grenade is very dangerous

NOTICE

Degree of danger - high. Used grenades are dangerous. Do not lift, roll or slide.

DRAWINGS/CUTAWAY/MARKING/STENCILING:		LEGEND
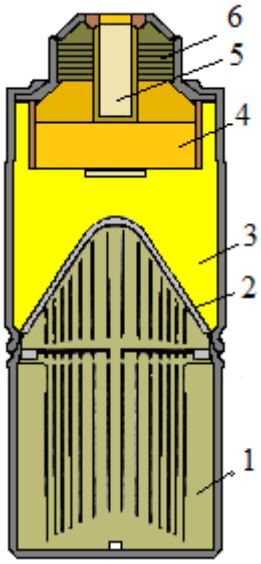 *cross-section of grenade* ***RKG -3***	 *grenade RKG-3*	*1 – Stand off cover; 2 - steel shaped charge liner; 3 - explosive charge; 4 - booster charge; 5 - detonator; 6 - thread; 7 – grenade body; 8 - instructions for using the grenade; 9 – safety pin; 10 – fuze spoon ; 11 - initiation mechanism.*
 grenade RKG-3		 *drawing of grenade RKG-3*

FWP Ammunition

140

AMMUNITION FAMILY HEM

AMMUNITION TYPE	***Hand Grenade***
DESIGNATION	***Antitank Hand Grenade in a Metal Body***
NAME/ASSIGNED MARK (original)	***RKG -3 M***
COUNTRY of ORIGIN	*Former USSR;*

RKG -3 M

total weight of the grenade with detonators and transport safety device [*kg*]	*1.07*
explosive type	*TNT/RDX (45; 55)*
weight of explosive [*kg*]	*0.567 (shaped charge)*
diameter (mm)	*56*
height of body [*mm*]	*165*
dimension of pressure plate [*mm*]	397
activation force (greater than) [*N*]	
effect of the grenade	*fragmentation up to 25 m, penetration up to 220 mm RHA*
type of fuze	*mechanical, impact,*
type of additional (anti-lift) fuze	

PACKING

Number of rounds in the package	*12*	**Weight of full package [*kg*]**	*24*

DESCRIPTION

Anti-tank shaped charge grenade RKG -3M was developed and produced in former USSR. It is a developed version of the RKG-3. It differs from the RKG-3 with shaped charge liner from copper and has longer focal length of the shaped charge (stand off cover). Externally the RKG-3M has a longitudinal grooves on the grenade body. This antitank grenade was and still is in use in many countries, where they were imported or copied (mainly in former Yugoslavia – named as M-79).

COLOR and MARKING

Body colour:	*Green*
Text colour:	*Black*

FUZE

Type	Characteristic
mechanical	*Mechanical, contact, impact*

SAFETY CONSIDERATION THREAT

Simple removal of grenade is very dangerous

NOTICE

Degree of danger - high. Used grenades are dangerous. Do not lift, roll or slide.

DRAWINGS/CUTAWAY/MARKING/STENCILING:	LEGEND
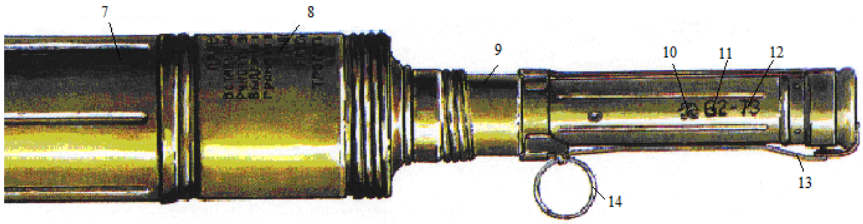 *View grenade **RKG -3 M***	*1 – stand off cover; 2 - shaped charge liner –copper; 3 - explosive charge; 4 – booster charge ; 5 - detonator; 6 - thread; 7 -grooves; 8 - instructions for the using the grenade; 9 - fuze mechanism 10 - marking the fuze - check sign and number of the manufacture; 11 - marking the fuze - lot of manufacture; 12 - marking the year of manufacture ; 13 - fuze spoon; 14 - safety pin*
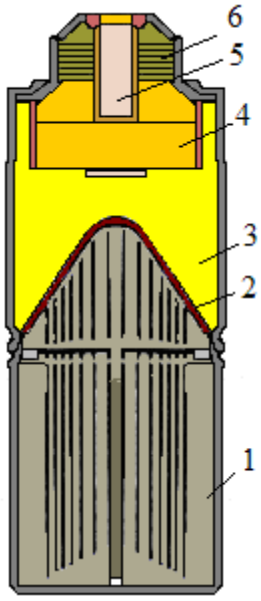 *Cross section of grenade **RKG -3 M***	 *grenade RKG -3 M (Yugoslavia version M-79)*

FWP Ammunition

141

AMMUNITION FAMILY HEM

AMMUNITION TYPE	***Hand Grenade***
DESIGNATION	***Antitank Shaped Charge Hand Grenade in a Metal Body***
NAME/ASSIGNED MARK (original)	***P.I.R.A***
COUNTRY of ORIGIN	*Former DDR, Former USSR*

P.I.R.A	
total weight of grenade with detonators and transport safety device [*kg*]	*0.7*
explosive type	*Semtex /RDX (50; 50)*
weight of explosive [*kg*]	*0.500*
diameter (mm)	*96*
height of body [*mm*]	
dimension of pressure plate [*mm*]	*378*
activation force (greater than) [*N*]	
effect of mine	*fragmentation up to 25 m, penetration up to 170 mm RHA*
type of fuze	*mechanical, contact, impact*
type of additional (anti-lift) fuze	

PACKING

Number of rounds in the package		**Weight of full package [*kg*]**	

DESCRIPTION

Anti-tank shaped charge grenade PIRA is a developed version of an RPG-43, designed against combat armoured vehicles and tanks. Produced and used in the units of the former DDR Army, the Soviet Union or the countries created after the collapse of the Soviet Union. Explosion loads of the grenade have a high strength to penetrate armour. It uses the phenomenon tandem (dual) shaped charge effect, where the first shaped charge – Semtex - breaks loads MW shielding armour, and the second - RDX pierces armour.

COLOR and MARKING

Body colour:	*Green*
Text colour:	*Black*

FUZE

Type	**Characteristic**
mechanical	*Mechanical, contact, impact*

SAFETY CONSIDERATION THREAT

Simple removal of grenade is very dangerous

NOTICE

Degree of danger - high. Used grenades are dangerous. Do not lift, roll or slide.

DRAWINGS/CUTAWAY/MARKING/STENCILING:	LEGEND
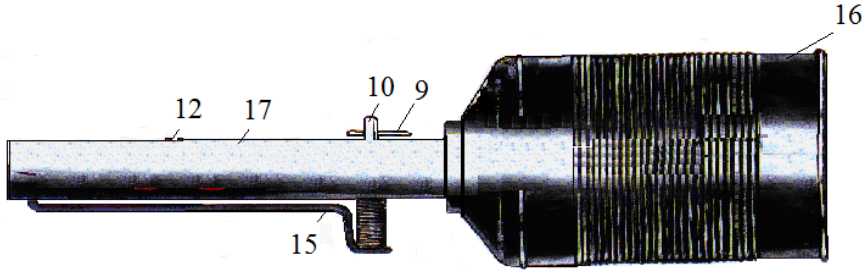 *Figure grenade P.I.R.A*	*1 – initiator; 2 – incendiary mixture; 3 - semtex - explosive shaped charge; 4 - detonator; 5- grenade body; 6 - explosive charge - RDX; 7-shaped charge liner; 8 - booster ; 9 – safety pin; 11 - striker mechanism; 13 - parachute; 14 - safety pin spring; 15 – fuze lever; 16 - grenade body; 17 - handle;*
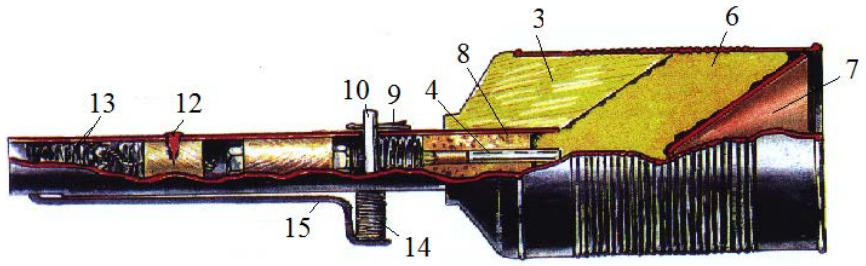 *cross-section of grenade P.I.R.A*	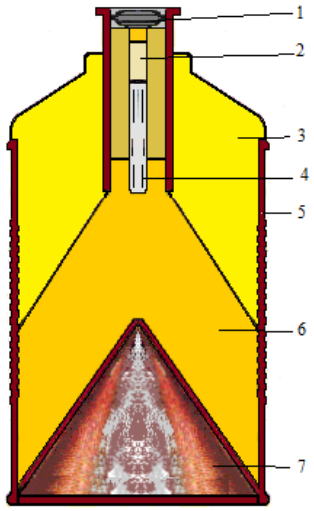 *cross-section of* grenade P.I,R.A
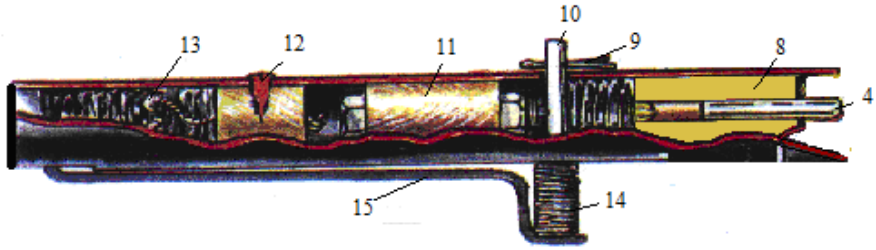 *Cross section of the fuze holder with a mechanism*	

FWP Ammunition

142

AMMUNITION FAMILY HEM

AMMUNITION TYPE	***Hand Grenade***
DESIGNATION	***Antitank Hand Grenade in a Metal Body***
NAME/ASSIGNED MARK (original)	***RPG-40***
COUNTRY of ORIGIN	*Former USSR*

RPG-40	
total weight of grenade with detonators and transport safety device [*kg*]	*1.22*
explosive type	*TNT*
weight of explosive [*kg*]	*0.62*
diameter (mm)	*90*
height of body [*mm*]	
dimension of pressure plate [*mm*]	
activation force (greater than) [*N*]	
effect of grenade	*fragmentation up to 20 m, penetration up to 20 mm RHA*
type of central fuze	*mechanical, contact, impact*
type of additional (anti-lift) fuze	

PACKING

Number of rounds in the package		**Weight of full package [*kg*]**	

DESCRIPTION

Anti-tank hand grenade RPG-40 was developed and produced in former USSR. Its anti-tank capability came from blast effect produced by the detonation of 760 grams of explosive. This effect enabled to penetrate about 20 mm of armour, a secondary damage is spalling, by contact with thicker armour. This made the grenade very effective against earlier German tanks, but ineffective against later models, such as the Panzer IV and the Panzer V.

COLOR and MARKING

Body colour:	*Green*
Text colour:	*Black*

FUZE

Type	**Characteristic**
mechanical	*Mechanical, contact, impact*

SAFETY CONSIDERATION THREAT

Simple removal of grenade is very dangerous

NOTICE

Degree of danger - high. Used grenades are dangerous. Do not lift, roll or slide.

DRAWINGS/CUTAWAY/MARKING/STENCILING:		LEGEND
 grenade RPG-40	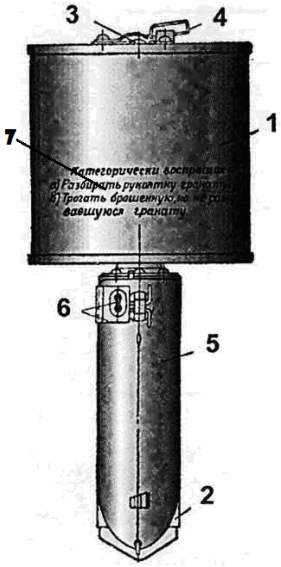 *grenade RPG-40*	**RPG-40** *1 - body of the grenade; 2 – fuze spoon 6 - safety pins; 7 - instructions for using the grenade, 8 - explosive charge* 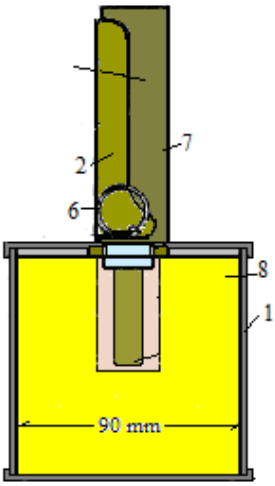 *cross-section of grenade RPG-40*
 grenade RPG-40	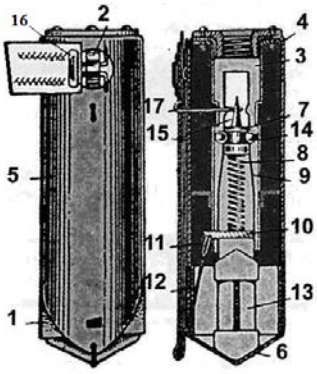 *handle a grenade RPG-40*	

FWP Ammunition

143

AMMUNITION FAMILY HEM

AMMUNITION TYPE	***Hand Grenade***
DESIGNATION	***Antitank Hand Grenade in a Metal Body***
NAME/ASSIGNED MARK (original)	***RPG -41***
COUNTRY of ORIGIN	*Former USSR*

total weight of grenade with detonators and transport safety device [*kg*]	*1.3*
explosive type	*TNT*
weight of explosive [*kg*]	*0.61*
diameter (mm)	*90*
height of body [*mm*]	
dimension of pressure plate [*mm*]	
activation force (greater than) [*N*]	
effect of grenade	*Fragmentation up to 20 m, penetration up to 20 mm RHA*
type of fuze	*Mechanical, contact, impact*
type of additional (anti-lift) fuze	

PACKING

Number of rounds in the package		**Weight of full package [*kg*]**	

DESCRIPTION

Anti-tank hand grenade. RPG-41 was developed and produced in former USSR. Used in combat during World War II by units of the Red Army. RPG 41 differs from the grenade RPG-40 by handle, adopted from the hand grenade RDG-33.

COLOR and MARKING

Body colour:	*Green*
Text colour:	*Black*

FUZE

Type	Characteristic
mechanical	*Mechanical, contact, impact*

SAFETY CONSIDERATION THREAT

Simple removal of grenade is very dangerous

NOTICE

Degree of danger - high. Used grenades are dangerous. Do not lift, roll or slide

DRAWINGS/CUTAWAY/MARKING/STENCILING:		LEGEND
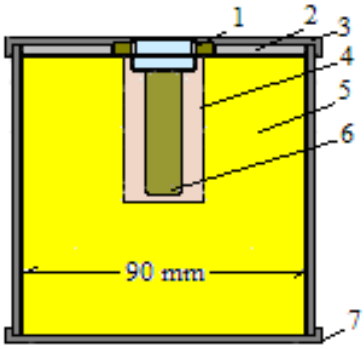 *cross-section of grenade RPG-41*	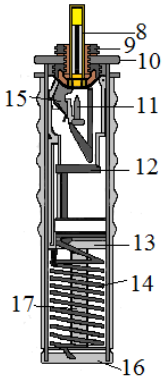 *handle grenade RPG-41*	*1 – fuze well with thread for handle; 2 cardboard cover; 3 base cover;* *4 - booster; 5 - explosive charge; 6 - detonator well; 7- upper cover; 8 - detonator; 9 - thread;; 11-striker*
 grenade RPD-41		 *grenade RPD-41*

FWP Ammunition

144

AMMUNITION FAMILY HEM

AMMUNITION TYPE	***Hand Grenade***
DESIGNATION	***Antitank Hand Grenade in a Metal Body***
NAME/ASSIGNED MARK (original)	***UG - 41***
COUNTRY of ORIGIN	*Former USSR*

UG - 41	
total weight of grenade with detonators and transport safety device [*kg*]	*1.0*
explosive type	*TNT*
weight of explosive [*kg*]	*0,610*
diameter (mm)	*90*
height of body [*mm*]	
dimension of pressure plate [*mm*]	*310*
activation force (greater than) [*N*]	
effect of grenade	*fragmentation up to 20 m, penetration up to 10 mm RHA*
type of fuze	*mechanical, contact, impact*
type of additional (anti-lift) fuze	

PACKING

Number of rounds in the package		**Weight of full package [*kg*]**	

DESCRIPTION

Anti-tank hand grenade UG -41 has similar construction like grenade RPD-41 (RPG -41). Designed by Eng. Kuplyanskina for the defense of Leningrad in 1941, produced by AMRI Institute in Leningrad, and later by the other companies located in the region. Grenade was designed for combat use against armored vehicles. Used in during World War II by units of the Red Army.

COLOR and MARKING

Body colour:	*Green*
Text colour:	*Black*

FUZE

Type	**Characteristic**
mechanical	*Mechanical, contact, impact*

SAFETY CONSIDERATION THREAT

Simple removal of grenade is very dangerous

NOTICE

Degree of danger - high. Used grenades are dangerous. Do not lift, roll or slide

DRAWINGS/CUTAWAY/MARKING/STENCILING:	LEGEND
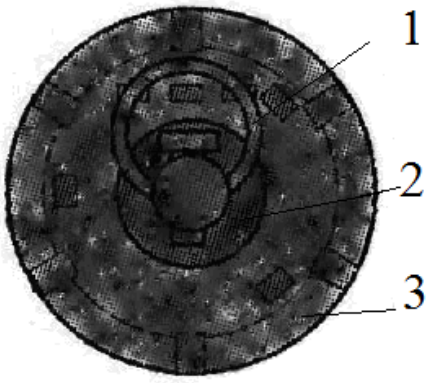 *Upper part of grenade UG-41*	*1 – grenade upper lid ; 2 – fuze well; 3 - handle pins; 4 - fuze; 5 - explosive charge; 6 - handle; 7 - grenade body.*
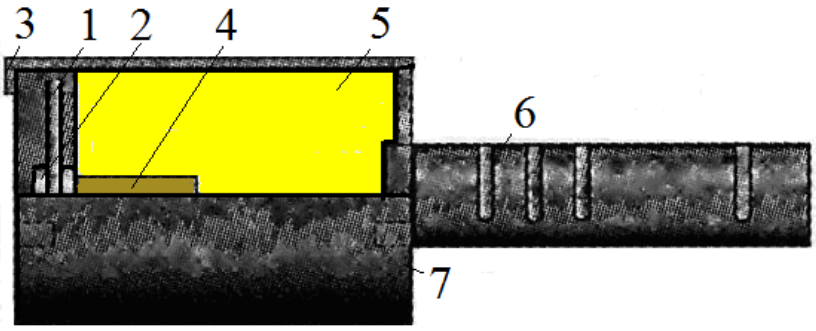 *cross-section of grenade UG -41*	
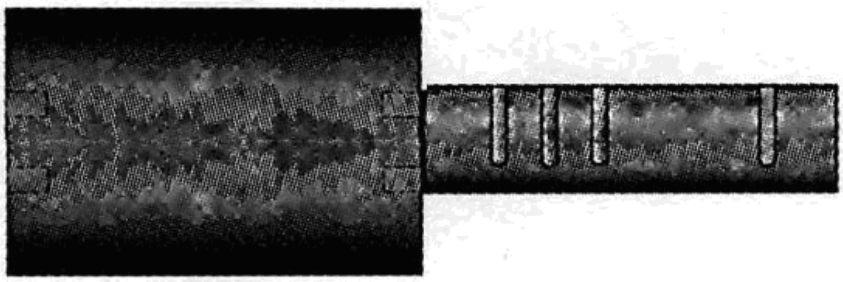 *grenade UG -41*	

FWP Ammunition

145

AMMUNITION FAMILY HEM

AMMUNITION TYPE	***Hand Grenade***
DESIGNATION	***Antipersonnel Hand Grenade - Defensive in a Metal Body***
NAME/ASSIGNED MARK (original)	***RGD - 33***
COUNTRY of ORIGIN	*Former USSR*

RGD - 33	
total weight of grenade with detonators and transport safety device [*kg*]	*0.5; with fragmentation sleeve 0.75*
explosive type	*TNT*
weight of explosive [*kg*]	*0.085*
diameter (mm)	*45 (54 with sleeve)*
height of body [*mm*]	*70*
dimension of pressure plate [*mm*]	
activation force (greater than) [*N*]	
effect of grenade	*fragments up to 10 (with sleeve up to 15) m*
type of fuze	*mechanical, non-contact, time delay 3-4 s*
type of additional (anti-lift) fuze	

PACKING

Number of rounds in the package		**Weight of full package [*kg*]**	

DESCRIPTION

The antipersonnel hand grenade RGD-33 was developed and produced in former USSR. This grenade was issued as a defensive grenade, but could be easily turned into an offensive grenade by removing the fragmentation sleeve. The primer/detonator tube had to be inserted before use. The striker is fully armed by pulling the handle and secured by a safety switch that held the handle in this position. When the user released the switch, the whole handle would go forward and the striker hit the primer. Shrapnel would end up to about 100 m.

COLOR and MARKING

Body colour:	*Green*
Text colour:	*Black*

FUZE

Type	**Characteristic**
mechanical	*Mechanical, noncontact, time delay 3 – 4 s*

SAFETY CONSIDERATION THREAT

Simple removal of grenade is very dangerous

NOTICE

Degree of danger - high. Used grenades are dangerous. Do not lift, roll or slide

DRAWINGS/CUTAWAY/MARKING/STENCILING:		LEGEND
grenade RGD 33 with cover	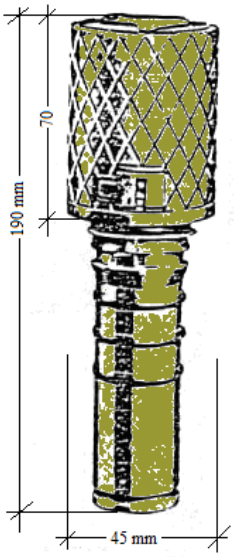 *grenade RGD 33*	*1 - the upper cover of grenade; 2 - detonator well; 3 -safety switch ; 4- fragmentation sleeve-cast iron; 5 - latch cap; 6-handle; 7- the handle with fuze;. 8 – primer ; 9 - thread - screw; 11-striker; 12 striker trigger mechanism; 3 - plunger; 14 – striker spring;; 16 - base part of handle;*
		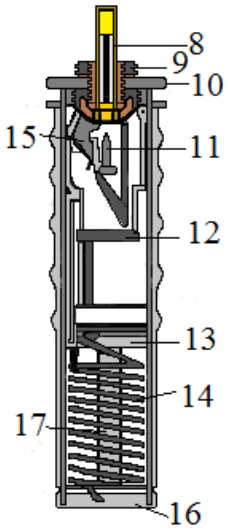 *grenade handle RGD-33*
		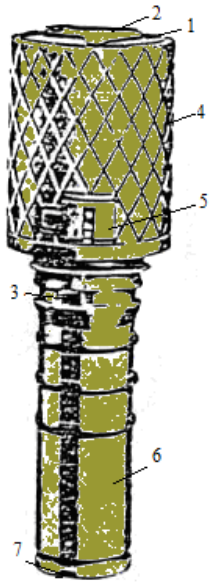 *grenade RGD-33*

FWP Ammunition

146

AMMUNITION FAMILY HEM

AMMUNITION TYPE	***Hand Grenade***
DESIGNATION	***Antipersonnel Hand Grenade - Defensive in a Metal Body***
NAME/ASSIGNED MARK (original)	***RG- 42***
COUNTRY of ORIGIN	*Former USSR,*

RG- 42	
total weight of grenade with detonators and transport safety device [*kg*]	*0.420*
explosive type	*TNT*
weight of explosive [*kg*]	*0.119*
diameter (mm)	*58*
height of body [*mm*]	*55*
dimension of pressure plate [*mm*]	130
activation force (greater than) [*N*]	
effect of grenade	*fragmentation up to 10 m*
type of fuze	*UZGR (UZGR –M)*
type of additional (anti-lift) fuze	

PACKING

Number of rounds in the package		**Weight of full package [*kg*]**	

DESCRIPTION

The antipersonnel hand grenade RG-42 was developed and produced in former USSR. It is a fragmentation grenade originally introduced during World War II as an emergency measure, continuing in use with the USSR and its Warsaw Pact allies in the post-war period. RG-42 is a defensive grenade made from thin sheet steel. It held fragmentation sleeve inside of body. It contained about 120 grams of explosive charge (TNT) in a cylindrical can. The grenade could be thrown about 35-40 meters and has an effective fragmentation radius of around 10 meters. The total weight of the grenade with the fuze is 420 grams. It used the 3.2 to 4 second UZRG-M fuze, also used in the RGD-5, RG-41, and F1 grenades.

COLOR and MARKING

Body colour:	*Green*
Text colour:	*Black*

FUZE

Type	**Characteristic**
UZGR (UZGR–M)	*mechanical, with a delay of 3-4 seconds.*

SAFETY CONSIDERATION THREAT

Simple removal of grenade is very dangerous

NOTICE

The degree of danger - small. Used grenades are dangerous. Do not lift, roll or slide.

DRAWINGS/CUTAWAY/MARKING/STENCILING:	LEGEND
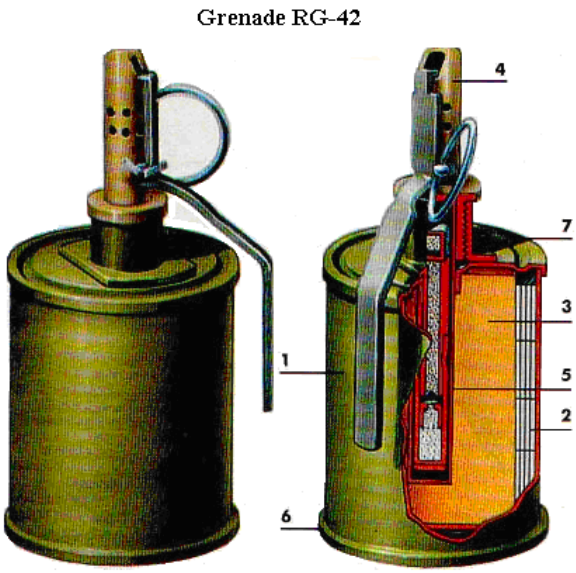	*1 - body; 2 – fragmentation sleeve; 3 - explosive charge - TNT; 4 - fuze UZGR; 5 - detonator; 6 - base of grenade; 7- grenade body lid.* *grenade RG-42 abandoned*
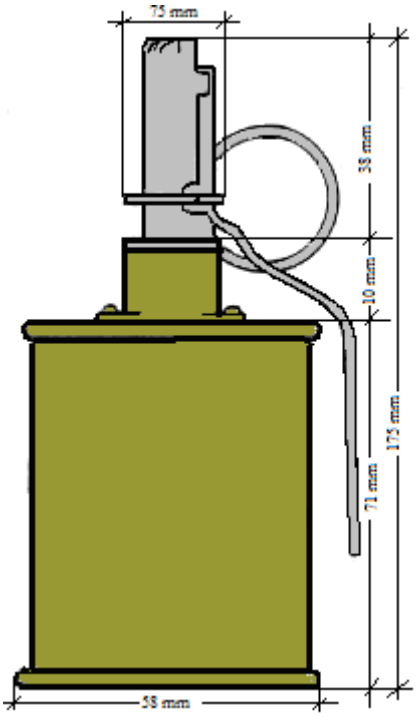 *grenade RG-42*	

FWP Ammunition

147

AMMUNITION FAMILY HEM

AMMUNITION TYPE	***Hand Grenade***
DESIGNATION	***Antipersonnel Hand Grenade in a Metal Body***
NAME/ASSIGNED MARK (original)	***ROG-43***
COUNTRY of ORIGIN	*Former USSR*

ROG-43	
total weight of grenade with detonators and transport safety device [*kg*]	*0.450*
explosive type	*TNT*
weight of explosive [*kg*]	*0.150*
diameter (mm)	*57*
height of body [*mm*]	
dimension of pressure plate [*mm*]	
activation force (greater than) [*N*]	
effect of grenade	*fragmentation up to 10 m*
type of central fuze	*mechanical, integrated, with a delay of 3-4 seconds.*
type of additional (anti-lift) fuze	

PACKING

Number of rounds in the package		**Weight of full package [*kg*]**	

DESCRIPTION

Antipersonnel fragmentation hand grenade ROG-43 was developed around 1942. Entered into serial production in 1943. The grenade is known also like ERG-43. The grenade has a body adapted from a grenade RGD-33. This grenade was developed as a defensive grenade, but could easily be turned into an offensive grenade by removing the fragmentation sleeve.

COLOR and MARKING

Body colour:	*Green*
Text colour:	*Black*

FUZE

Type	**Characteristic**
Integrated	*Mechanical, integrated, with a delay of 3-4 seconds.*

SAFETY CONSIDERATION THREAT

Simple removal of grenade is very dangerous

NOTICE

The degree of danger - small. Used grenades are dangerous. Do not lift, roll or slide.

DRAWINGS/CUTAWAY/MARKING/STENCILING:	LEGEND
	1 – fragmentation sleeve; 2 – grenade ROG-43-offensive; 3 – fuze spoon; 4 – safety pin ; 5 - shipping cap; 6 – striker spring; 7 - striker; 9 - detonator
	components of grenade ROG-43
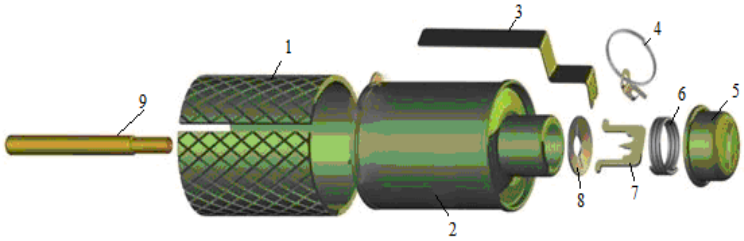 *components of grenade ROG-43*	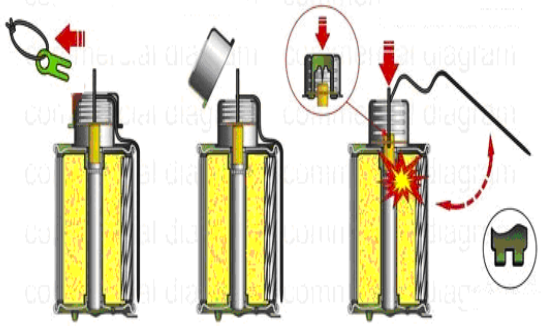 *action of grenade ROG-43 fuze*

FWP Ammunition

148

AMMUNITION FAMILY SLM

AMMUNITION TYPE	***Rifle Launched Grenade***
DESIGNATION	***Rifle Launched Antipersonnel Fragmentation Grenade***
NAME/ASSIGNED MARK (original)	***Rifle grenade Model 1913 Djakonova (model 1913/1974 DM)***
COUNTRY of ORIGIN	*Former USSR*

Rifle grenade Model 1913 Djakonova	
total weight of grenade with detonators and transport safety device [*kg*]	0.780 / 0.810 *model 1913/1974*
explosive type	*TNT*
weight of explosive [*kg*]	0.450 / 0.470 *model 1913/1974*
diameter (mm)	82
height of body [*mm*]	*123 / 115 model 1913/1974*
dimension of pressure plate [*mm*]	
activation force (greater than) [*N*]	
effect of grenade	*fragmentation up to 25 m*
type of central fuze	*mechanical timing*
type of additional (anti-lift) fuze	

PACKING

Number of pieces in the package		**Weight of full package [*kg*]**	

DESCRIPTION

Rifle fragmentation grenade model 1913 was developed and produced in former Russia and USSR. Rifle grenade has timing fuze developed in 1913. The rifle grenade has the shape of the mortar projectile with the clock mechanism for setting the time activation of the grenade ignition from 1 to 12 seconds. In 1930 Djakonov grenade was partially modified and marked in 1913/1930. The grenade had a hole through the body with a diameter of 7.75 - 7.82 mm for the passage of a rifle projectile. After leaving the launcher, grenade exploded at about 500 fragments. The rifle grenade-launcher 1913/1930 had 40.6 mm caliber; weight 350 gr; Mass of grenade - 780 gr.

Colours: - color crest - without colour - TNT charge;
- color crest - blue for charge - amatol;
- color red crest - incendiary charge - electron;
- color green crest - smoke charge;
- color brown crest - ammonal charge.

The grenade was modernized again in 1974 as the marking 1930/1974 DM.

COLOR and MARKING

Body colour:	*Green olive (black)*
Text colour:	*white*

FUZE

Type	**Characteristic**
Mechanical timing	*delay of from 2 to 12 seconds.*

SAFETY CONSIDERATION THREAT

In 1941-1942, worked clockwork and time delay could be between 1 and 10 minutes.
In 1974 modernized, marked as model 1913 / 1974DM.

NOTICE

Type of material body - Aluminium (magnesium)
Ejector version 1913/1974 – plastic. The opportunity to shoot from a rifle AK 47

DRAWINGS/CUTAWAY/MARKING/STENCILING:	LEGEND
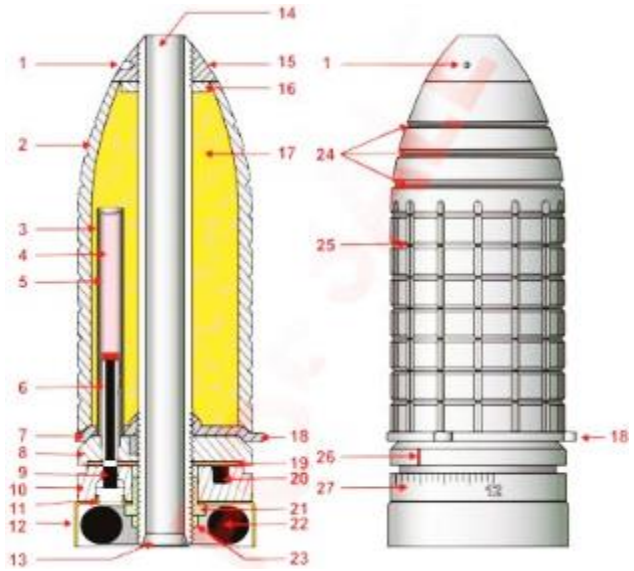 *cross-section a grenade Djakonov*	*Construction of Djakonov rifle granade* *1 - hole for a key; 2 - the body; 3 – detonator well; 4 - primer - mercury fulminate; 5 - copper sleeve detonator; 6 - Powder delay mechanism; 7 – venting hole; 8 - bottom of the body; 9 – detonation delaying powder train 10 - ring clockwork; 11 - ratchet clockwork; 12 - clockwork; 13 –central hole – barrel for projectile; 14 - port tube for the projectile; 15 - top cover - tuft; 16 - top cover seal; 17 – explosive charge; 18 - easy to arrange ring; 19 - spacer felt; 20 - gunpowder; 21 - a clutch clockwork; 22 - steel balls igniter mechanism; 23 - mounting (nut) retractor mechanism; 24 – 3 grooves for fragmentation; 25 – prefragmented body; 26 - mark scale; 27 - Layout spacer ring (3 to 12 sec.).* *rifle grenade Djakonov model 1913*
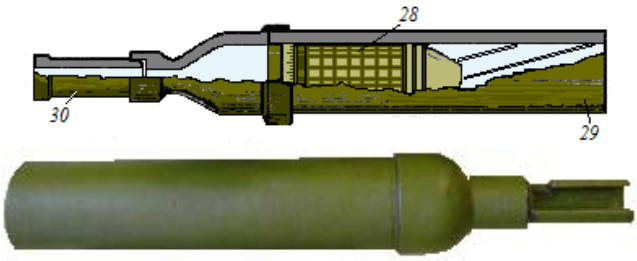 *grenade launcher Djakonova.1930 / 1974 DM* *(cover plate for rifle AK 47)*	 *rifle grenade Djakonov model 1913/30*
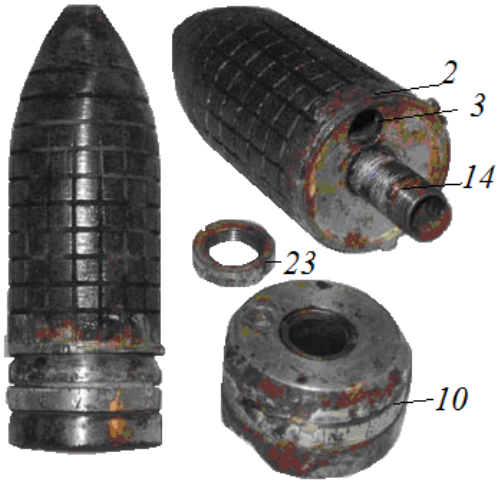 *disassembled grenade Djakonova.1913*	

FWP Ammunition

149

AMMUNITION FAMILY HEM

AMMUNITION TYPE	***Hand Grenade***
DESIGNATION	***Antipersonnel Fragmentation Hand Grenade in a Metal Body***
NAME/ASSIGNED MARK (original)	***RDG model 1914 / 1930***
COUNTRY of ORIGIN	*Former Russia, Former USSR*

RDG model 1914 / 1930	
total weight of grenade with detonators and transport safety device [*kg*]	*0.59 - with fragmentation sleeve 0.78*
explosive type	*TNT*
weight of explosive [*kg*]	*0.32*
diameter grenade (mm)	*45*
length (height) grenade (mm)	*235*
handle height grenade (mm)	
effect of grenade - to the width [*m*]	*fragmentation up to 25*
type of central fuze	*mechanical, time delay to 4 sec*

PACKING

Number of rounds in the package		**Weight of full package [*kg*]**	

DESCRIPTION

Antipersonnel fragmentation hand grenade RDG-1914/30 was developed and produced in former Russia and later modernized in former USSR. The grenade was developed from WW1 stick hand grenade HG 1914. Grenade 1914/30 has TNT explosive charge instead of picric acid like model 1914. The Red Army used the grenade in the years 1930 -1955 with minor modifications. The disadvantage of grenades was different sizes, depended on the manufacturer. This made difficulties to establish cast-iron fragmentation sleeve. The grenade RDG-1914/1930 was replaced by the RDG33 and F1 grenades.

COLOR and MARKING

Body colour:	*Green*
Text colour:	*Black*

FUZE

Type	**Characteristic**
mechanical	*Mechanical, stabilizer*

SAFETY CONSIDERATION THREAT

Simple removal of grenade is very dangerous

NOTICE

body material - steel; fragmentation sleeve - cast iron

DRAWINGS/CUTAWAY/MARKING/STENCILING:	LEGEND
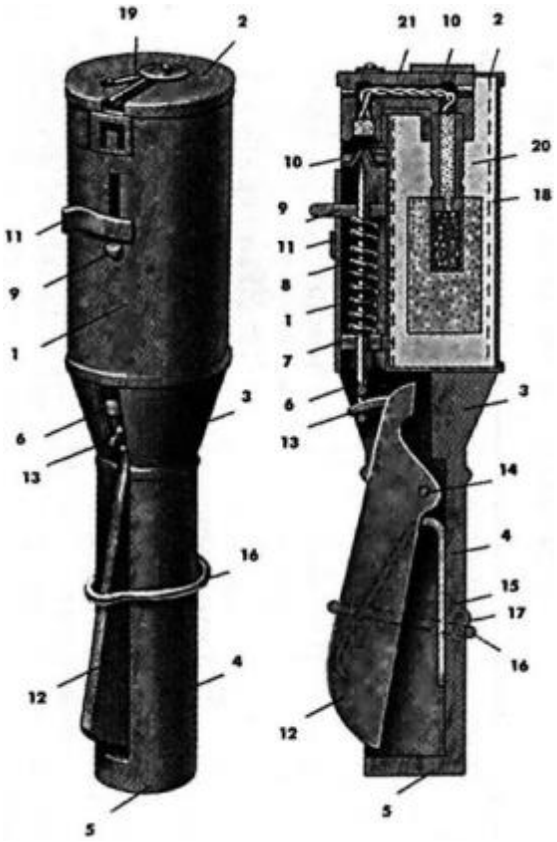	*<u>Grenade **1914/30**</u>* *1 - body, 2 - housing cover, 3 - connector, 4 - the handle;5 - base part of handle, 6 - striker, 9 - trigger, 10 - initiator; 12 - lever, 13 - hook; 15 - flat spring, 16 - ring, 17 - hook ring, 18 - the contribution of the paper, 20 - explosive charge;21 - retarder - blasting fuze* *grenade model 1914/30* *grenade model 1914/30 with the fragmentation sleeve*

FWP Ammunition

150

AMMUNITION FAMILY HEM

FIELD of AMMUNITION	***Hand Grenade***
NAME	***Special Hand Grenade in a Metal Body***
NAME/ASSIGNED MARK (original)	***Chemical grenade mod.1917- gas***
COUNTRY of ORIGIN	*Former Russia and Former USSR*

Chemical grenade mod. 1917 - gas

total weight of grenade with detonators and transport safety device [*kg*]	0.836
explosive type	*Chemical agent*
weight of chemical agent [*kg*]	0.484 – 0.519
diameter (mm)	*66*
height of body [*mm*]	*109*
dimension of pressure plate [*mm*]	
effect of grenade - to the width [*m*]	
activation force (greater than) [*N*]	
effect of grenade	
type of fuze	*mechanical, time delay 4 s.*
type of additional (anti-lift) fuze	

PACKING

Number of rounds in the package		**Weight of full package [*kg*]**	

DESCRIPTION

Chemical grenade model 1917 – gas grenade was developed and produced in Former Russia. This grenade was constructed of thin steel, components soldered together. It carried liquid gas and a detonator had to be inserted by a user. The lever had to be pushed into the handle; the striker was blocked by "fork" of that same lever. When thrown, the striker was released as the lever was pushed away from the handle under spring pressure. Striker was launched upwards into the primer and fired the delay. The grenade differs from HE model 1914 only by skull and crossed bones marked on the side.

COLOR and MARKING

Body colour:	*Green*
Text colour:	*Black*

FUZE

Type	Characteristic
mechanical	*Mechanical, with time delay*

SAFETY CONSIDERATION THREAT

Simple removal of grenade is dangerous

NOTICE

Degree of danger - high. Used grenades are dangerous. Do not lift, roll or slide.

DRAWINGS/CUTAWAY/MARKING/STENCILING:	LEGEND

Chemical grenade mod.1917- gas

FWP Ammunition

151

AMMUNITION FAMILY HEM

AMMUNITION TYPE	***Hand Grenade***
DESIGNATION	***Special Hand Grenade in a Metal Body***
NAME/ASSIGNED MARK (original)	***Incendiary grenade mod. 1917/1942***
COUNTRY of ORIGIN	*Former Russia, Former USSR,*

Incendiary grenade mod. 1917/1942	
total weight of grenade with detonators and transport safety device [*kg*]	0.800 – 0.850
pyrotechnic mixture type	*Composition 1- combustible load:* *77% barium nitrate; 17%; aluminum powder; 6% oil.* *Composition 2- combustible load:* *70% barium nitrate; 24% of aluminum powder; 6% oil.*
weight of pyrotechnic mixture [*kg*]	0.550
diameter (mm)	
height of body [*mm*]	
dimension of pressure plate [*mm*]	
effect of grenade - to the width [*m*]	
activation force (greater than) [*N*]	
effect of grenade	
type of fuze	*Mechanical, time delay 4s*
type of additional (anti-lift) fuze	

PACKING

Number of pieces in the package		**Weight of full package [*kg*]**	

DESCRIPTION

Incendiary grenade model 1917/1942 was developed and produced in former Russia and former USSR. The grenade contents incendiary pyrotechnic mixture. There are two common types of incendiary mixtures:
Composition 1: 77% barium nitrate; 17% of aluminum powder; 6% oil.
Composition 2: 70% barium nitrate; 24% of aluminum powder; 6% oil.
The grenade was modified in 1942 and used during World War II.

COLOR and MARKING

Body colour:	*Green*
Text colour:	*Black*

FUZE

Type	**Characteristic**
mechanical	*Mechanical, with delay 4 s*

SAFETY CONSIDERATION THREAT

Simple removal of grenade is dangerous.

NOTICE

Degree of danger - high. Used unexploded grenade is dangerous. Do not lift, role or slide.

DRAWINGS/CUTAWAY/MARKING/STENCILING:	LEGEND
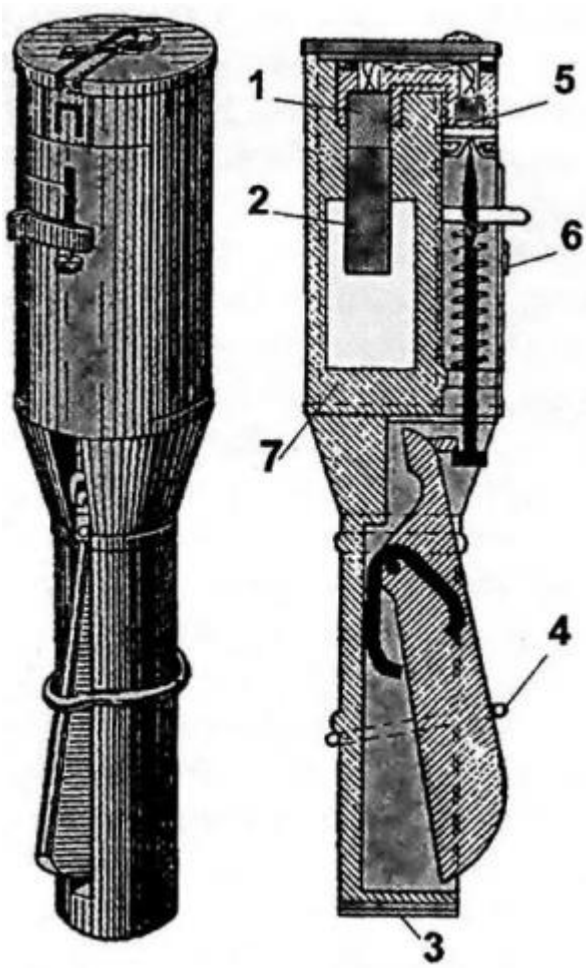 *grenade model 1917/42*	***Incendiary grenade mod. 1917-1942*** *1 - detonator ; 2 – bursting charge ; 3- base of the handle; 4 - safety ring, 5 - initiator; 6 – safety pin; 7 - incendiary charge* *grenade model 1917/42* 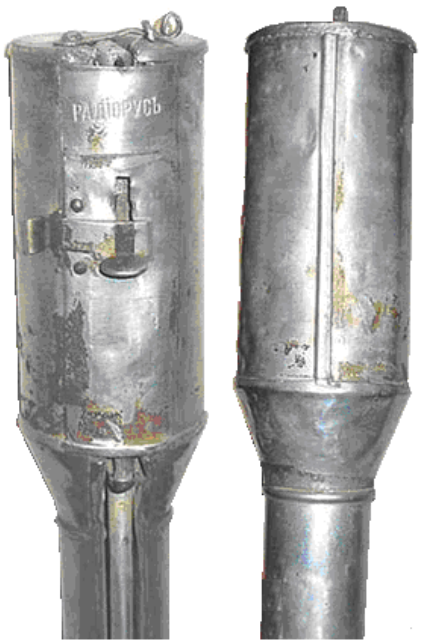 *grenade model 1917/42*

FWP Ammunition

152

Type of ammo
Hand grenade

FIELD of AMMUNITION	***Hand Grenade***
NAME	***Antipersonnel Hand Grenade - offensive***
NAME/ASSIGNED MARK (original)	***Hand Grenade RG-41***
COUNTRY of ORIGIN	*Former USSR*

RG-41	
total weight of grenade with detonators and transport safety device [*kg*]	*0.440*
explosive type	*TNT*
weight of explosive [*kg*]	*0.150*
diameter grenade (mm)	*53*
length (height) grenade (mm)	*105*
handle height grenade (mm)	
effect of grenade - to the width [*m*]	*Up to 5*
type of central fuze	*mechanical, delay 3.1' – 3.8 sec*

PACKING

Number of rounds in the crate		**Weight of full crate [*kg*]**	

DESCRIPTION

Antipersonnel fragmentation hand grenade RG-41 was developed and produced in former USSR during the WW II. The RG-41 was offensive grenade. The production was short time only, from 1941 to 1942 later on was replaced by RG-42.

COLOR and MARKING

Body colour:	*Green*
Text colour:	*Black*

FUZE

Type	**Characteristic**
UZRG	*Mechanical, contact wit pyrotechnic delaying*

SAFETY CONSIDERATION THREAT

Simple removal of grenade is very dangerous

NOTICE

Degree of danger - high. Used unexploded grenade is dangerous. Do not lift, roll or slide.

DRAWINGS/CUTAWAY/MARKING/STENCILING:	LEGEND
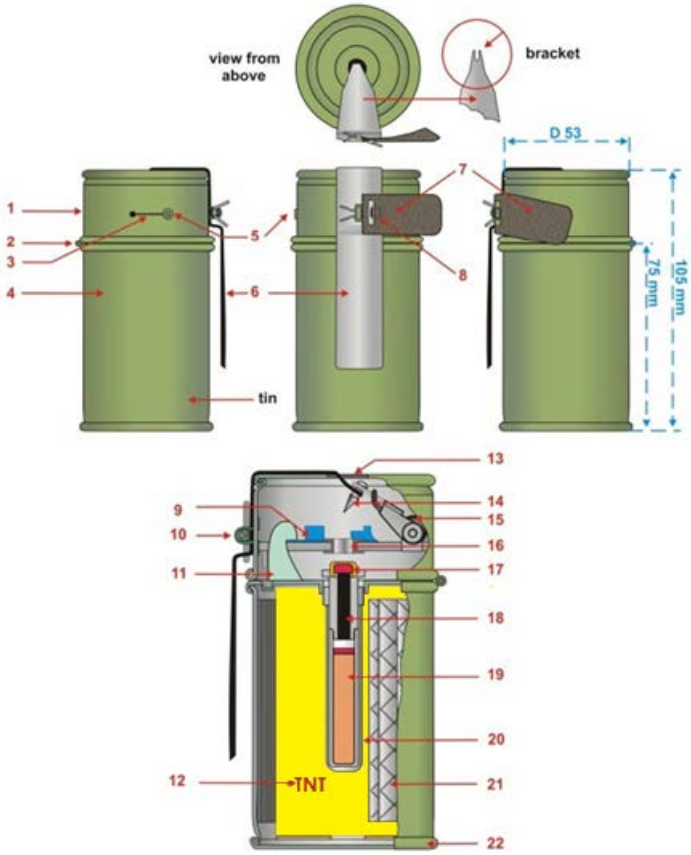 *grenade RG-41*	*1-lift-up lid; 2- joint; 3- slit for latch; 4- body; 5- lock button; 6 – safety lever; 7- safety pin; 8- split pin; 9- catch; 10- lug for safety pin; 11- hook; 12 - explosive charge – TNT; 13- reach-through hole; 14- firing pin;15 – main spring, 16- bush; 17- fulminate cap; 18- pyrotechnic delay pellet; 19 – detonator; 20- detonator well;21- fragmentation jacket; 22- rolled base part.* 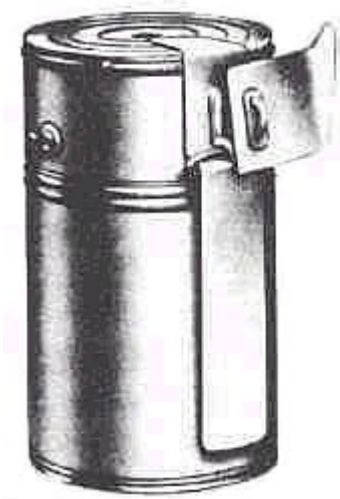 *grenade RG-41*

FWP Ammunition

153

AMMUNITION FAMILY HEM

AMMUNITION TYPE	***Hand Grenade***
DESIGNATION	***Anti – personnel Hand Grenade Training in a Metal Body***
NAME/ASSIGNED MARK (original)	***URG – N***
COUNTRY of ORIGIN	*Former USSR*

URG – N	
total weight of grenade with detonators and transport safety device [*kg*]	*0.310*
explosive type	*TNT, magnesium and aluminum*
weight of explosive [*kg*]	
diameter (mm)	*53*
height of body [*mm*]	*88*
dimension of pressure plate [*mm*]	
activation force (greater than) [*N*]	
effect of grenade	*up to 1 m*
type of fuze	*UZGR (UZGR- M); DS -62.*
type of additional (anti-lift) fuze	

PACKING

Number of rounds in the package		**Weight of full package [*kg*]**	

DESCRIPTION

The antipersonnel hand grenade URG-N was designed for training, developed and produced in former USSR. The URG-N is a reusable training model of the RGD-5 of cast iron construction, a modified fuze containing a tiny explosive charge which simulates the grenade detonation. The body of this grenade is painted black with white markings.

COLOR and MARKING

Body colour:	*Black*
Text colour:	*White*

FUZE

Type	**Characteristic**
UZGR (UZGR- M);.	*Mechanical, time delay 3.2 -4 sec.*
DS -62	*Mechanical,*

SAFETY CONSIDERATION THREAT

Simple removal of grenade is dangerous.

NOTICE

Degree of danger – low.

DRAWINGS/CUTAWAY/MARKING/STENCILING:	
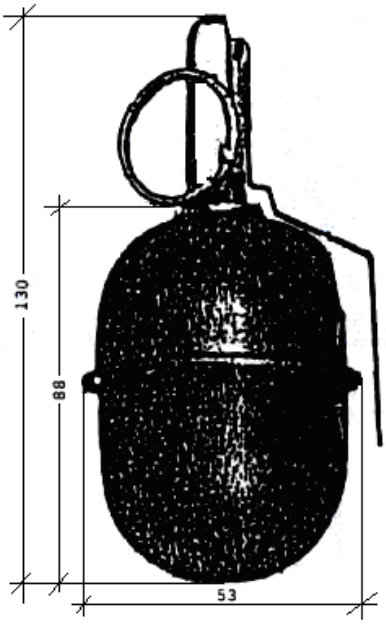	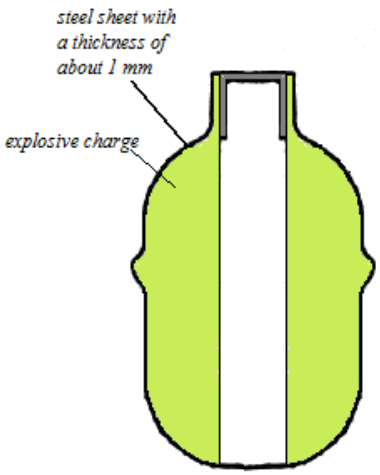 *cross-section URG-N*
 initiator	 *grenade URG-N*

FWP Ammunition

154

AMMUNITION FAMILY HEM

AMMUNITION TYPE	***Hand Grenade***
DESIGNATION	***Anti – personnel Hand Grenade Offensive in a Metal Body***
NAME/ASSIGNED MARK (original)	***RG – N***
COUNTRY of ORIGIN	*Former USSR*

RG – N	
total weight of grenade with detonators and transport safety device [*kg*]	*0.290*
explosive type	*A-IX-1*
weight of explosive [*kg*]	*0.100*
diameter (mm)	*60*
height of body [*mm*]	*113*
dimension of pressure plate [*mm*]	
activation force (greater than) [*N*]	
effect of grenade	*fragmentation up to 4 m*
type of central fuze	*UDZS*

PACKING

Number of rounds in the package		**Weight of full package [*kg*]**	

DESCRIPTION

The antipersonnel fragmentation hand grenade RG-N was developed and produced in former USSR. It is an offensive grenade, characterized by a small size and weight, but is very effective. It consists of a single layered aluminum pre-fragmented body. It is very similar to the defensive RGO hand grenade. The grenade shell consists of two internally serrated aluminum hemispheres. The UDZS fuze has impact and time delay functions. The impact fuze arms after a pyrotechnic delay from 1 to 1.8 seconds. When the grenade hit an object then a striker mechanism triggers detonation. The grenade can detonate itself after 3.2 to 4 seconds due to the second pyrotechnic delay.

COLOR and MARKING

Body colour:	*Green*
Text colour:	*Black*

FUZE

Type	**Characteristic**
UDZS	*Mechanical, impact, with time delay 3.2- 4.0 sec.*

SAFETY CONSIDERATION THREAT

Simple removal of grenade is very dangerous.

NOTICE

Degree of danger - high. Used unexploded grenade is dangerous. Do not lift, roll or slide.

DRAWINGS/CUTAWAY/MARKING/STENCILING:		LEGEND
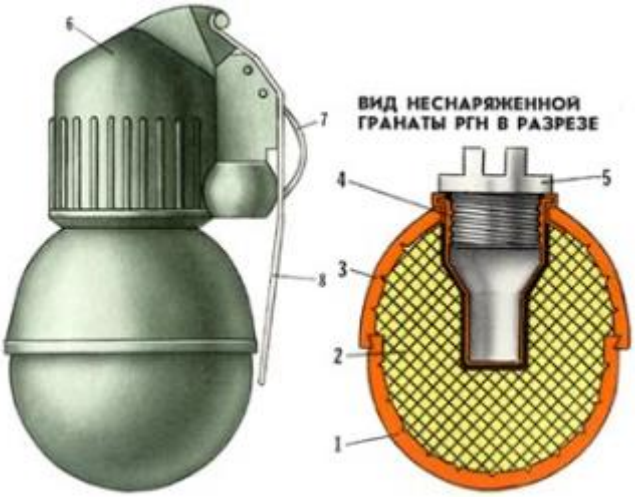 *grenade RG-N*		*<u>Grenade RG-N</u>* *1- base hemisphere; 2 - explosive charge;3 - top hemisphere; 4 - the glass insert; 5 - transportation cap; 6 - fuze;* *7 - safety pin; 8 - lever.*
grenade RG-N	*grenade RG-N*	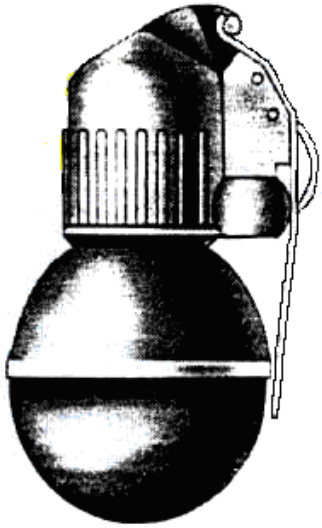 *grenade RG-N*

FWP Ammunition

155

AMMUNITION FAMILY HEM

AMMUNITION TYPE	***Hand Grenade***
DESIGNATION	***Antipersonnel Fragmentation Hand Grenade – Defensive in a Metal Body***
NAME/ASSIGNED MARK (original)	***RG–O***
COUNTRY of ORIGIN	*Former USSR*

RG–O	
total weight of grenade with detonators and transport safety device [*kg*]	*0.53*
explosive type	*A-IX-1*
weight of explosive [*kg*]	*0.09*
diameter (mm)	*60*
height of body [*mm*]	*68*
dimension of pressure plate [*mm*]	
activation force (greater than) [*N*]	
effect of grenade - to the width [*m*]	*fragmentation up to 20 m*
type of fuze	*UDZS*
type of additional (anti-lift) fuze	

PACKING

Number of rounds in the package		**Weight of full package [*kg*]**	

DESCRIPTION

Antipersonnel defensive fragmentation hand grenade RG-O was developed and produced in former USSR. It consists of a double layered steel pre-fragmented body. It is very similar to the single-layered offensive/defensive aluminum-bodied RG-N hand grenade. The UDZS fuze has impact and time delay functions. The impact fuze arms after a pyrotechnic delay from 1 to 1.8 seconds. When the grenade hit an object then a striker mechanism triggers detonation. The grenade can detonate itself after 3.2 to 4.2 seconds due to the second pyrotechnic delay. The fragments produced by the grenade generate a lethal radius from 6 meters to 20 meters, with the safety radius 100 m.

COLOR and MARKING

Body colour:	*olive green or light brown (igniter - white - plastic overlay)*
Text colour:	*Black*

FUZE

Type	**Characteristic**
UDZS	*Mechanical, impact, time delay 3.2- 4.0 sec.*

SAFETY CONSIDERATION THREAT

Simple removal of grenade is very dangerous.

NOTICE

Degree of danger - high. Used unexploded grenade is dangerous. Do not lift, roll or slide.

DRAWINGS/CUTAWAY/MARKING/STENCILING:	LEGEND
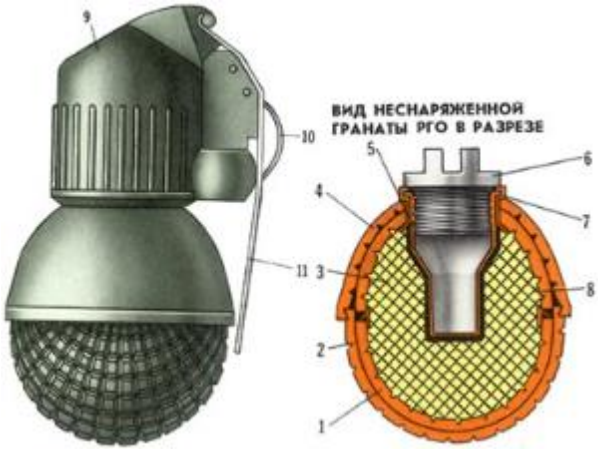 *grenade RG-O*	*1 - inside base hemisphere; 2 - outer base hemisphere; 3 - explosive charge; 4 -top outer hemisphere; 5 - threaded fuze well; 6 - plug; 8 – top inner hemisphere; 9 - fuze; 10 – safety pin ; 11 - lever ; 12 - Rubber spring; 13 marking the grenade name; 14 - marking the explosive name; 15- marking a lot of grenade manufacture; 17 – marking year of grenade manufacture; 18 - marking fuze manufacturer; 19 – marking a lot of fuze manufacture; 20 - marking the year of fuze manufacture*
grenade RG- O	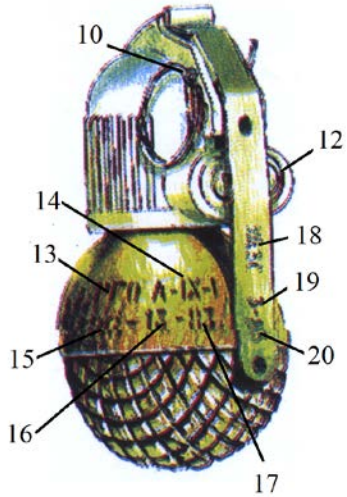 *grenade RG- O*
grenade RG- O	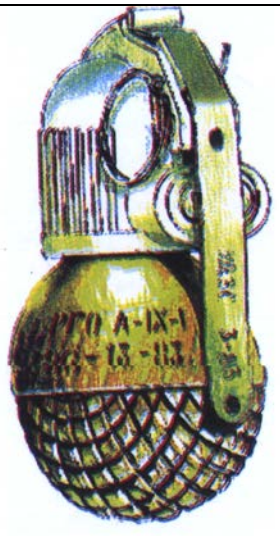 *grenade RG- O*

FWP Ammunition

156

AMMUNITION FAMILY HEM

AMMUNITION TYPE	***Hand Grenade***
DESIGNATION	***Antipersonnel Fragmentation Hand Grenade in a Metal Body***
NAME/ASSIGNED MARK (original)	***RDG -5***
COUNTRY of ORIGIN	*Former USSR*

RDG -5	
total weight of grenade with detonators and transport safety device [*kg*]	*0.31*
explosive type	*TNT*
weight of explosive [*kg*]	*0.110*
diameter (mm)	*58*
height of body [*mm*]	*117*
dimension of pressure plate [*mm*]	
activation force (greater than) [*N*]	
effect of grenade	*up to 25 m*
type of fuze	*UZGR; UZGRM; DS-62*
type of additional (anti-lift) fuze	

PACKING

Number of rounds in the package		**Weight of full package [*kg*]**	

DESCRIPTION

The RGD-5 is a post-World War II. Soviet anti-personnel fragmentation grenade, designed in the early 1950th. RGD-5 was introduced into service in 1954. It is still in service in many of Russia's former client states and has been supplied to Iraq as well as other Arab nations. The grenade contains a 110-gram charge of TNT with an internal fragmentation liner that produces around 350 fragments and has a lethality radius of 25 meters. The weight of the grenade with the fuze fitted is 310 grams. Typically, the RGD-5 uses the 3.2 to 4 second delay UZRGM fuze, a universal Russian type which is also used in the RG-41, RG-42, and F1 grenades. The RGD-5 may also be fitted with the more modern DVM-78 fuze, or variants of the UZRGM with delays from 0 to 13 seconds (i.e. instantaneous for use in booby traps). It is also possible to screw an MUV booby-trap firing device into the fuze well. The RGD-5 can be thrown about 35 to 45 meters by the average male soldier. When is thrown, possible to hear a loud "pop" as the fuze ignites and begins to burn. The grenade can inflict injuries (e.g. penetrating eye wounds) out to 15 meters from the site of detonation. Victims caught within 3 meters of the detonation site are almost certain to be killed or severely wounded.

COLOR and MARKING

Body colour:	*Green*
Text colour:	*Black*

FUZE

Type	**Characteristic**
UZGR l; UZGR- M;	*Mechanical, time delay 3.2 – 4 s*
DS-62	*Mechanical,*

SAFETY CONSIDERATION THREAT

Simple removal of grenade is very dangerous.

NOTICE

Degree of danger - high. Used unexploded grenade is dangerous. Do not lift, roll or slide.

DRAWINGS/CUTAWAY/MARKING/STENCILING:		LEGEND
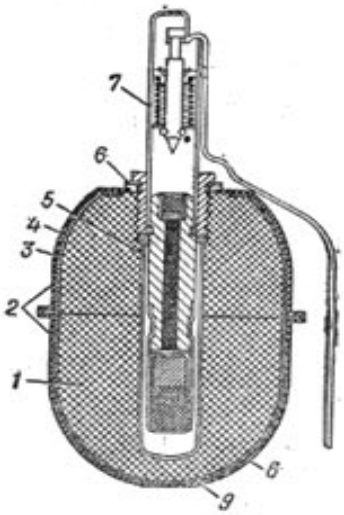 *cross-section RDG -5*	 *grenade RDG -5*	*<u>Internal structure of grenade</u>* *1 - explosive charge; 2 - the body; 5 - fuze well; 6 - threaded part of fuze well; 7 - fuze; 10- grenade body; 11- safety pin; 12- pull ring- safety; 13 – fuze body; 14- lever.*

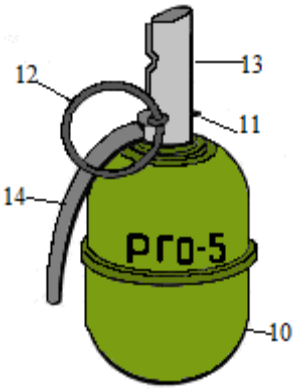

grenade RDG-5

FWP Ammunition

157

AMMUNITION FAMILY HEM

AMMUNITION TYPE	***Hand Grenade***
DESIGNATION	***Special Hand Grenade in a Plastic Body***
NAME/ASSIGNED MARK (original)	***RG 60 DZ, (RG 60 SZ), (RG 60 TB)***
COUNTRY of ORIGIN	***Former USSR***

RG 60 DZ, (RG 60 SZ), (RG 60 TB)	
total weight of grenade with fuze and transport safety device [*kg*]	*0.350*
explosive type	*RDX with additives (special cargo)- depends on type RG*
weight of explosive [*kg*]	*0.240 - depends on type RG*
diameter grenade (mm)	*58*
height of body [*mm*]	*175*
dimension of pressure plate [*mm*]	
activation force (greater than) [*N*]	
effect of grenade	*from 7 to 10 m, depends on type of grenade*
type of fuze	*UZGR-M; DS.-62; DVM-78*
type of additional (anti-lift) fuze	

PACKING

Number of rounds in the package		**Weight of full package [*kg*]**	

DESCRIPTION

The special hand grenades RG 60DZ, RG 60SZ and RG 60TB were developed and produced (from 1992) in former USSR. Now are produced and used in Russia federation.
RG 60 DZ *grenade produces smoke, incendiary or special effects. Pyrotechnic mixture from hand grenade shooting out flammable objects onto armored vehicles, while creating a smoke screen in length 8 m and high about 3 m.*
RG 60 SZ *grenade produces flash and light effects by explosion. Bang produced a minimum value of 160 DB at a distance of 10 meters from the blast site. Double effect - stunning and blinding eliminates an opponent from the fight. Used by special forces (Spetsnaz) and the police.*
RG 60TB *grenade is designed for the forces destruction. Death zone in the open area is about 5-7 m. The grenade loads of thermobaric explosive about 240 gr (efficiency 500 gr TNT) with additions. This corresponds to the effects of artillery fragmentation grenade - caliber of 76-85 mm. The body of thermobaric hand grenade has two parts, the main charge and the bursting charge. On the top of the body is threaded pipe for a fuze.*
A chemical version of the grenade was also developed (battlefield warfare agents).

COLOR and MARKING

Body colour:	*brown or green*
Text colour:	*White (yellow), black*

FUZE

Type	**Characteristic**
UZGR-M;	*Mechanical, time delay*
DS.-62;	*Mechanical, time delay*
DVM-78	*Mechanical, time delay*

SAFETY CONSIDERATION THREAT

Simple removal of grenade is very dangerous.

NOTICE

High risk. Do not lift, roll or slide. RG grenades of series 60 are for various purposes, but they have the same design (thermo pressure, smoke, chemical or ignition elements in the body). The more details are not available.

DRAWINGS/CUTAWAY/MARKING/STENCILING:	LEGEND
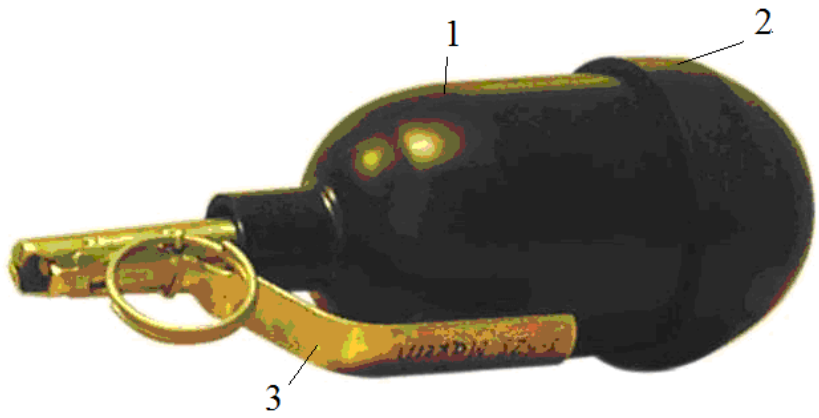	*1 -body (grenade RG-60); 2- overlaid with an additional charge - special; 3 -fuze UZGR-M.*
 grenade RG 60 DZ, (RG 60 SZ), (RG 60 TB)	

FWP Ammunition

158

AMMUNITION FAMILY HEM

AMMUNITION TYPE	***Hand Grenade***
DESIGNATION	***Anti-personnel Fragmentation Hand Grenade – Defensive in a Metal Body***
NAME/ASSIGNED MARK (original)	***RGO -78***
COUNTRY of ORIGIN	*BULGARIA*

RGO -78	
total weight of grenade with detonators and transport safety device [*kg*]	*0.450*
explosive type	*A-IX-1 / TNT*
weight of explosive [*kg*]	*0.090*
diameter (mm)	*61*
height of body [*mm*]	*138 with the fuze UZRGM / 94 with the fuze DVM*
dimension of pressure plate [*mm*]	
activation force (greater than) [*N*]	
effect of grenade - to the width [*m*]	*fragmentation up to 25 m*
type of fuze	*UZGRM ; DVM*
type of additional (anti-lift) fuze	

PACKING

Number of rounds in the package	*20*	**Weight of full package [*kg*]**	*17*

DESCRIPTION

Antipersonnel fragmentation defensive hand grenade RPO-78 was developed and produced in Bulgaria. This grenade is equipped with delay fuze, which ensures its burst within 3.2 - 4 sec. The steel shell has a thickness of about 2.5 mm. Approximately 850 steel balls are embedded in a plastic liner.

COLOR and MARKING

Body colour:	*Green*
Text colour:	*Black*

FUZE

Type	**Characteristic**
UZGRM, DVM	*Mechanical, time delay 3.2-4 s*

SAFETY CONSIDERATION THREAT

Simple removal of grenade is very dangerous.

NOTICE

Degree of danger - high. Used unexploded grenade is dangerous. Do not lift, roll or slide

DRAWINGS/CUTAWAY/MARKING/STENCILING:		LEGEND
 grenade RGO-78 *with fuze UZGRM* *explosive charge A-IX-1*	 *grenade RGO-78* *explosive charge – TNT*	*1- body; 3 -fuze UZGR-M;4- marking the name of grenade; 5- marking control character grenade manufacturer; 6- marking the number of grenade manufacturer; 7-marking the lot of manufacture; 8 - marking the year of manufacture; 9- marking the type of explosive used.*
 grenade RGO-78		 *grenade RGO-78*

FWP Ammunition

159

AMMUNITION FAMILY HEM

AMMUNITION TYPE	***Hand Grenade***
DESIGNATION	***Antipersonnel Fragmentation Hand Grenade - Defensive in Plastic Body***
NAME/ASSIGNED MARK (original)	***RGO-88***
COUNTRY of ORIGIN	***Poland***

RGO-88

total weight of grenade with detonators and transport safety device [*kg*]	*0.485*
explosive type	*A-IX-1*
weight of explosive [*kg*]	*0.060*
diameter (mm)	*54*
height of body [*mm*]	*114*
dimension of pressure plate [*mm*]	
activation force (greater than) [*N*]	
effect of grenade	*up to 5 m*
type of central fuze	*UZGR; UZGRM;*
type of additional (anti-lift) fuze	

PACKING

Number of rounds in the crate	*20*	**Weight of full crate [*kg*]**	*16.4*

DESCRIPTION

Antipersonnel fragmentation defensive hand grenade RGO-88 was developed and produced in Poland. The grenade RGO - 88 is the successor of the defensive grenade F-1. The main components of the grenade RGO-88 are a plastic body with steel balls, explosive charge (A-IX-1) and fuze (UZRG or UZRGM).
Three types of grenades are produced: battle version, school version marked by white strip, and training version marked by white square on the body.

COLOR and MARKING

Body colour:	*green*
Text colour:	*Black (white marking)*

FUZE

Type	Characteristic
UZGR; UZGRM;;	*mechanical, with a delay of 3-4 seconds.*

SAFETY CONSIDERATION THREAT

Simple removal of grenade is very dangerous.

NOTICE

With armed fuse is dangerous. Do not lift, roll or slide.

DRAWINGS/CUTAWAY/MARKING/STENCILING:		LEGEND
defensive grenade RGO-88	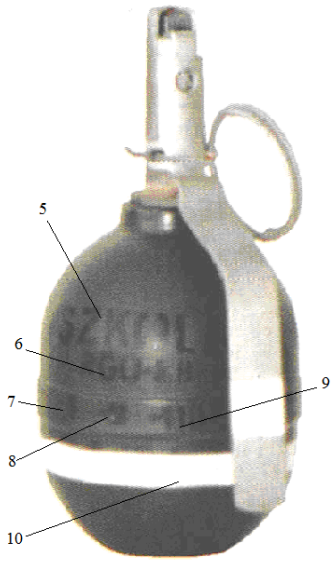 *RGO-88 grenade – school version*	*1 - grenade body; 2- spoon of the fuze with marking (the name of fuze, fuze manufacturer number, lot and year of manufacture and serial fuze); 3 – safety pin 4 - fuze - UZGRM; 5- marking the destination of grenade; 6- marking the name of grenade; 7- marking the number of grenade manufacturer; 8- marking the lot of manufacture; 9 - marking the year of grenade manufacture; 10 - white stripe an indication of the grenade is designed for training 11- white square - a training grenade;*
defensive grenade RGO-88		*RGO-88 grenade – training version*

FWP Ammunition

160

AMMUNITION FAMILY HEM

AMMUNITION TYPE	***Hand Grenade***
DESIGNATION	***Antipersonnel Fragmentation Hand Grenade-Offensive in a Plastic Body***
NAME/ASSIGNED MARK (original)	***RGZ- 89***
COUNTRY of ORIGIN	***Poland***

RGZ- 89

total weight of grenade with detonators and transport safety device [*kg*]	*0.370*
explosive type	*TNT/A-IX-1*
weight of explosive [*kg*]	*0.110*
diameter (mm)	*59*
height of body [*mm*]	
dimension of pressure plate [*mm*]	
activation force (greater than) [*N*]	
effect of grenade	*fragmentation up to 5 m*
type of central fuze	*UZGR; UZGRM; DS-62,*

PACKING

Number of rounds in the package	*20*	**Weight of full package [*kg*]**	*14*

DESCRIPTION

The antipersonnel offensive fragmentation grenade RGZ-89 was developed and produced in Poland. The grenade is the successor of the offensive grenade RG - 42. The grenade consists of a plastic body, internal fragmentation sleeve, high explosive filling (RDX) and the fuze (UZRG or UZRGM) with delay 3.2-4 s. The fragmentation sleeve is made of notched light alloy wire coil. After detonation there are about 860 fragments, about 0.13 gram each.

COLOR and MARKING

Body colour:	*green*
Text colour:	*Black*

FUZE

Type	**Characteristic**
UZGR; UZGRM; DS-62,	*mechanical, with a delay of 3-4 seconds.*

SAFETY CONSIDERATION THREAT

Simple removal of grenade is very dangerous.

NOTICE

With armed fuse is dangerous. Do not lift, roll or slide.

DRAWINGS/CUTAWAY/MARKING/STENCILING:		LEGEND
 grenade with fuze DS.-62	 *grenade with fuze UZGR*	*1 - grenade body; 2 fuze UZGRM;* *3- safety pin; 4 – fuze spoon;* *grenade with fuze UZGRM*

FWP Ammunition

161

AMMUNITION FAMILY HEM

AMMUNITION TYPE	***Hand Grenade***
DESIGNATION	***Underwater Blast Hand Grenade in a Metal Body***
NAME/ASSIGNED MARK (original)	***UWG-0,1; (UWG-0,75; UWG-1,0)***
COUNTRY of ORIGIN	*Poland*

UWG-0,1; (UWG-0,75; UWG-1,0)	
total weight of grenade with detonators and transport safety device [*kg*]	*UWG-0,1 – 0.400 / UWG-0,75 – 0. 800 /; UWG-1,0 – 1.2*
explosive type	*TNT*
weight of explosive [*kg*]	*0.160 – depends on type*
diameter (mm)	*50*
height of body [*mm*]	*86 - 140 depends on type*
dimension of pressure plate [*mm*]	
activation force (greater than) [*N*]	
effect of grenade	*under the water surface up to 15 m*
type of fuze	*integrated pressure fuze*
type of additional (anti-lift) fuze	

PACKING

Number of rounds in the package		**Weight of full package [*kg*]**	

DESCRIPTION

Underwater blast hand grenades UWG-0.1/UWG-0.75/ UWG-1.0 were developed and produced in Poland. The grenades are used to protect naval bases and to protect ships against divers. Grenade consists of a metal body filled with explosives and mechanically locked fuze, which operates only in the case when reaches the preprogrammed pressure level. An aqueous medium fuze is completely protected and resistant to impact, even after removal of the lock pin and the trigger lever. Used in the Polish Army.

COLOR and MARKING

Body colour:	*blue tint*
Text colour:	*Black*

FUZE

Type	**Characteristic**
integrated pressure	*mechanical, works on the programmed depth below the water.*

SAFETY CONSIDERATION THREAT

Simple removal of grenades very dangerous.

NOTICE

Grenades used in the aquatic environment are dangerous.
The technical data are not available.

DRAWINGS/CUTAWAY/MARKING/STENCILING:	LEGEND
	1 - grenade body; 2 - fuze spoon; 3- fuze safety; 4 plug - fuze pressure (the depth of fuze response).

FWP Ammunition

162

AMMUNITION FAMILY HEM

AMMUNITION TYPE	***Hand Grenade***
DESIGNATION	***Anti-personnel Fragmentation Hand Grenade-Defensive in a Metal Body***
NAME/ASSIGNED MARK (original)	***Man Model 39***
COUNTRY of ORIGIN	*Hungary (Poland)*

Man Model 39	
total weight of grenade with detonators and transport safety device [*kg*]	*0.600*
explosive type	*TNT*
weight of explosive [*kg*]	*0. 060*
diameter (mm)	*54*
height of body [*mm*]	*126*
dimension of pressure plate [*mm*]	
activation force (greater than) [*N*]	
effect of grenade	*fragmentation up to 50 m*
type of fuze	*GR -31; G-R31 type.42; EM-Z; FG-M; UZGR; UZGRM; DS.-62*
type of additional (anti-lift) fuze	

PACKING

Number of rounds in the package		**Weight of full package [*kg*]**	

DESCRIPTION

Defensive fragmentation grenade Man model 39 has a shell made from heavy cast iron. Grenade body creates a large number of fragments, an effective radius is 150 m. User had to throw grenades from trench or must be hidden. Hungarian grenade was not different from production defensive grenade - Polish model 1924. Used by units of the Hungarian Army from World War II to the present day. Shell looks like the Soviet grenade F-1. In the arsenal of the Romanian Army is used nowadays with fuze EM-Z. Time delay detonator - 3.2 - 4 seconds.

COLOR and MARKING

Body colour:	*Green*
Text colour:	*Black*

FUZE

Type	**Characteristic**
GR -31	*Mechanical, manufacturing Polish*
MAN model.42	*changed the name of the GR-31 on the MAN model 42*
EM-Z; FG-M	*modernized MAN model 42*
UZGR; UZGR-M	*Soviet hand grenades universal fuze*
DS-62	*Soviet fuze for hand grenades*

SAFETY CONSIDERATION THREAT

Simple removal of grenade is very dangerous

NOTICE

Used unexploded grenade is dangerous. Do not lift, roll or slide.

DRAWINGS/CUTAWAY/MARKING/STENCILING:

Model 39 with fuze MAN-42

The Hungarian army used to this date with the fuze MAN-42 or FG-M

Model 39 with fuze MAN-42

MAN Model 39 with a fuze FG-M (F-1 a fuse FG-M)

MAN Model 39 with a fuze FG-M (F-1 a fuse FG-M)

FWP Ammunition

163

AMMUNITION FAMILY HEM

AMMUNITION TYPE	***Hand Grenade***
DESIGNATION	***Antipersonnel Fragmentation/ Blast Hand Grenade in a Plastic Body***
NAME/ASSIGNED MARK (original)	***DM-51***
COUNTRY of ORIGIN	*GERMANY*

DM-51	
total weight of grenade with detonators and transport safety device [*kg*]	*0.436 with fragmentation jacket*
explosive type	*Pentastite*
weight of explosive [*kg*]	*0.06*
diameter (mm)	*57 with fragmentation jacket / 37 without jacket*
height of body [*mm*]	
dimension of pressure plate [*mm*]	
activation force (greater than) [*N*]	
effect of grenade	*fragmentation with jacket up to 10 m*
type of fuze	*DM 82 - mechanical, delay time 3 -5 s*
type of additional (anti-lift) fuze	

PACKING

Number of rounds in the package		**Weight of full package [*kg*]**	

DESCRIPTION

Antipersonnel, fragmentation blast, offensive/defensive hand grenade DM-51 was developed and produced in Germany. The grenade consists of two separable components, i.e. explosive hand grenade plastic body with fuze and explosive and fragmentation jacket with fragments (diameter about 2 mm). The fragmentation jacket can be slipped onto the body and locked in place, depending on hand grenade´s use (defensive or offensive.) The DM 51 is a plastic hexagonal prism-shaped hand grenade containing compressed nitropenta explosive. The fragmentation jacket is barrel-shaped and contains 6500 steel balls.

COLOR and MARKING

Body colour:	*green - different shades*
Text colour:	*Black*

FUZE

Type	**Characteristic**
DM 82	*mechanical, with a delay of 3-5 sec.*

SAFETY CONSIDERATION THREAT

Simple removal of grenade is very dangerous

NOTICE

The degree of danger is low. Used grenades could be dangerous. Do not lift, roll or slide.

DRAWINGS/CUTAWAY/MARKING/STENCILING:	LEGEND
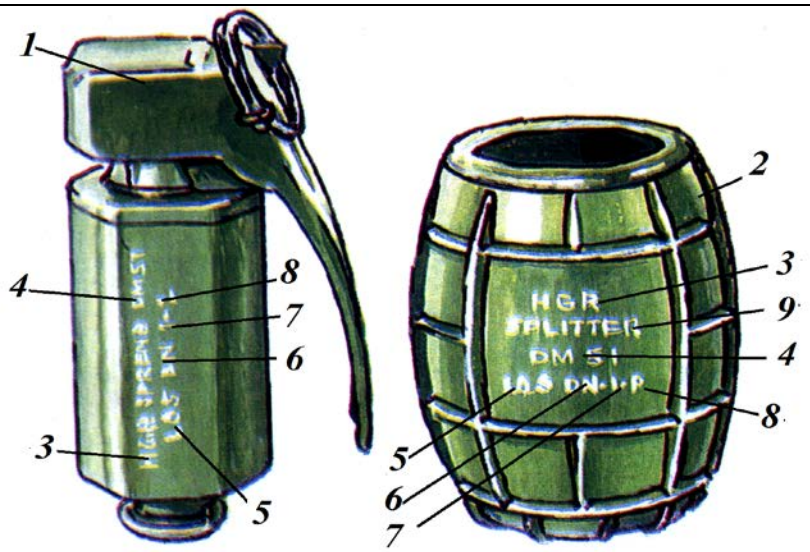 *grenade with fragmentation jacket DM-51*	*1 - fuze DM-82; 2 – fragmentation jacket; 3 - marking- abbreviation of a hand grenade; 4- marking type grenade; 5 – marking explosive charge; 6 - marking the type of explosive: 7 - marking the explosive device; 8 - marking explosive; 9 -fragmentation jacket marking;*
 grenade DM-51 - defensive version	
 grenade with fragmentation jacket DM-51	 *grenade DM-51*

FWP Ammunition

164

AMMUNITION FAMILY HEM

AMMUNITION TYPE	***Hand Grenade***
DESIGNATION	***Anti-personnel Fragmentation Hand Grenade in a Plastic Body***
NAME/ASSIGNED MARK (original)	***M-DN-11; M-DN-21; M-DN-31; M-DN-61***
COUNTRY of ORIGIN	***GERMANY***

M-DN-11; M-DN-21; M-DN-31; M-DN-61	
total weight of grenade with detonators and transport safety device [*kg*]	*M-DN 11 – 0.467; M-DN 21- 0.224 ; M-DN 31- 0.247; M-DN-61- 0.350*
explosive type	*Nitropenta/Tetryl*
weight of explosive [*kg*]	*0.43*
diameter (mm)	*59*
height of body [*mm*]	*72*
dimension of pressure plate [*mm*]	
activation force (greater than) [*N*]	
effect of grenade	*depends on type – fragmentation up to 50 m*
type of fuze	*HGRZ DM82A1B1*
type of additional (anti-lift) fuze	

PACKING

Number of rounds in the package		**Weight of full package [*kg*]**	

DESCRIPTION

Antipersonnel fragmentation hand grenades M-DN-11, M-DN-21, M-DN-31 and M-DN-61 were designed by Diehl in Germany, in order to replace DM-51 grenades. Grenades were also used by some middle east countries and African nations. The casing of the grenade is thick and shock resistant, which produces a large amount of fragments.
The M-DN-11 has a number of safety mechanisms to prevent accidental explosion, from conventional pull ring and spoon safeties to a detonator that is physically separated from the explosive.
The M-DN-21 is a smaller version of the M-DN-11, used by the same customers, and functioning in the same way.
The M-DN-31 is similar in size and shape to the M-DN-21, but is designed to produce more fragments and spread them over a wider area.
The M-DN-61 was used by Norwegian forces only. It closely resembles the M-DN-11 and M-DN-21, except for its size, which is in between those two grenades. It is otherwise a normal sort of grenade.

COLOR and MARKING

Body colour:	*various shades of green, depending on the type and garnet-type inscription convex in the central portion of the hull.*
Text colour:	*Black (or convex body coloured grenade)*

FUZE

Type	**Characteristic**
HGRZ DM82A1B1	*mechanical lever*

SAFETY CONSIDERATION THREAT

Simple removal of grenade is very dangerous.

NOTICE

Used unexploded grenade is dangerous. Do not lift, roll or slide.

DRAWINGS/CUTAWAY/MARKING/STENCILING:		LEGEND
 grenade M-DN 11	 *grenade M-DN 11*	*1 – safety pin ;* *2 - pin holder;* *3 - fuze HGRZ DM82A1B1;* *4 - fuze spoon;* *5- marking the name of the fuze;* *6 - grenade version for DN -11;* *7 - marking the destination fuze;* *8 - marking the name of the grenade.*
 grenade M-DN 11 *of fuze HGRZ DM82A1B1*	 *Iranian copy of grenade M-DN 11 by designation HGR - SPL/ NP*	
 M-DN 11, *M-DN 21,* *M-DN 31,* *M-DN 61* *the colors of each grenade series - M-DN*		

FWP Ammunition

165

AMMUNITION FAMILY HEM

AMMUNITION TYPE	***Hand Grenade***
DESIGNATION	***Anti-personnel Blast Hand Grenade – Offensive in a Metal Body***
NAME/ASSIGNED MARK (original)	***36 M***
COUNTRY of ORIGIN	***Hungary***

36 M	
total weight of grenade with detonators and transport safety device [*kg*]	*0.250*
explosive type	*TNT or (TNT/RDX 50 :50)*
weight of explosive [*kg*]	*0. 085*
diameter (mm)	*52*
height of body [*mm*]	*88*
dimension of pressure plate [*mm*]	
activation force (greater than) [*N*]	
effect of grenade	
type of fuze	*mechanical, impact*
type of additional (anti-lift) fuze	

PACKING

Number of rounds in the package		**Weight of full package [*kg*]**	

DESCRIPTION

Antipersonnel offensive hand grenade 36 M has been developed by the captain Zoltan Veitch (Zoltan Vecsey); in 1937 the grenade was taken into service of the Hungarian Army. Grenade body 36 M is made from steel; the two halves are bolted together. The upper part covers the detonator holder and cotter pin. The grenade contains the explosive charge and the ignitor mechanism. At the bottom of the outer grenade casing is a stiffener, which increases the rigidity of the body. Cardboard sleeve (paper) protects the explosive device from moisture. Partially modified in 1941. Used in the Hungarian Army in 60's of the last century. After pulling the safety pin, the top of the grenade will be unscrewed during a flight, which releases the striker to its position. The grenade detonates immediately after impact.

COLOR and MARKING

Body colour:	*Black (also meets the red one)*
Text colour:	*white (green)*

FUZE

Type	**Characteristic**
integrated	*Mechanical, impact,*

SAFETY CONSIDERATION THREAT

Simple removal of grenade is very dangerous.

NOTICE

With armed fuse - dangerous. Do not lift, roll or slide. Used in Europe, the Swiss equivalent of the grenade 36 M, produced under license was known as OH-G-40 (Offensive - Handgranate 1940).

DRAWINGS/CUTAWAY/MARKING/STENCILING:		LEGEND
O.H-G-40 Swiss equivalent of grenade 36 M	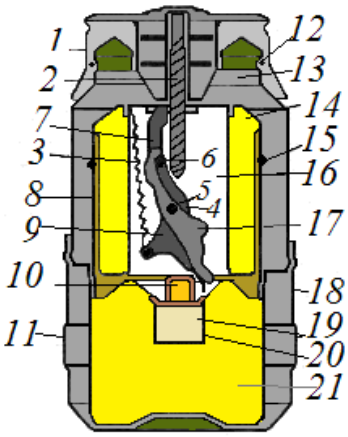 *cross-section grenade 36 M*	*1 - top grenade cover ; 2 - screw - striker; 3 - spring; 4 - latch lever; 5 - the axis of rotation of the lever; 6 - the axis of rotation of the latch lever; 7 - latch spire; 8 - inner sleeve; 9 - latch; 10 - detonator; 11- ring; 14 – explosive charge; 15 - cardboard sleeve; 17 - impact fuze mechanism; 18 - the body; 19 - booster; 21 - explosive charge.*
grenade 36 M	*grenade 36 M*	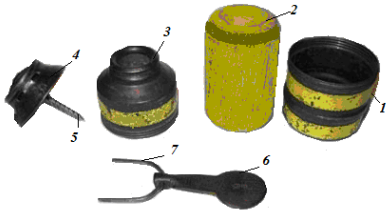 ***Construction grenade 36 M – training*** *1- grenade base body; 2 – explosive charge; 3 - the top body of grenade; 4 - Impact fuze mechanism; 5 - striker;*

Model designation and a producer of grenade, which can be read on the body.

AH : Állami Hadianyaggyár , Csepel 1939;
D : Danuvia Fegyver és Lőszergyár Rt , Budapest - Veszprém 1941;
E : Elzett Vasárugyár 1939
F : Magyar Fémlemezipari Művek , Budapeszt 1939;
FFG : Fémáru Fegyver és Gépgyár Rt , Budapeszt 1939;
G: MÁVAG , Budapeszt 1939;
HS : Hubert és Sigmund , Budapeszt 1940;
KJ : Krolupper József , Budapeszt 1939;
T: Telefongyár , Budapeszt 1939;
Z: Magyar Zománc és Fémárugyár Rt , Bonyhád , 1939,1942;
VGB : Vitez Gira és Becsey , Pestszenterzsébet 1940

FWP Ammunition

166

AMMUNITION FAMILY HEM

FIELD of AMMUNITION	***Hand Grenade***
NAME	***Anti-personnel Hand Grenade in a Metal Body***
NAME/ASSIGNED MARK (original)	***42 M***
COUNTRY of ORIGIN	***Hungary***

42 M	
total weight of grenade with detonators and transport safety device [*kg*]	*0.310 without fragmentation sleeve*
explosive type	*TNT*
weight of explosive [*kg*]	*0.134*
diameter (mm)	*48*
height of body [*mm*]	*194*
dimension of pressure plate [*mm*	
activation force (greater than) [*N*]	
effect of grenade	*fragmentation up to 25 m*
type of fuze	*mechanical, impact*
type of additional (anti-lift) fuze	

PACKING

Number of rounds in the package		**Weight of full package [*kg*]**	

DESCRIPTION

Antipersonnel offensive hand grenade 42 M was developed and produced in Hungary since 1942. The grenade was based on a German Sztilgranate 4. The grenade can be used as defensive hand grenade (with the fragmentation sleeve - cast iron). It has a wooden stick, which held a percussion fuze. Tripping delay detonator from 3.2 to 4 seconds.

COLOR and MARKING

Body colour:	*olive green (khaki)*
Text colour:	*black*

FUZE

Type	**Characteristic**
	Mechanical, with time delay

SAFETY CONSIDERATION THREAT

Simple removal of grenade is very dangerous.

NOTICE

Used unexploded grenade is dangerous. Do not lift, roll or slide.

DRAWINGS/CUTAWAY/MARKING/STENCILING:		LEGEND
 grenade 42 M	 *grenade 42 M* *42 M – red stripes - fighting;* *42 M - blue stripes - training;* *42 M - yellow stripes - school*	*Mechanism design fuze* *1 – hole for striking and safety mechanism; 2 - ring, 3 - handle;* *4 – 7 striker mechanism; 8 - spring, 9 - covers 10 - steel tube.* 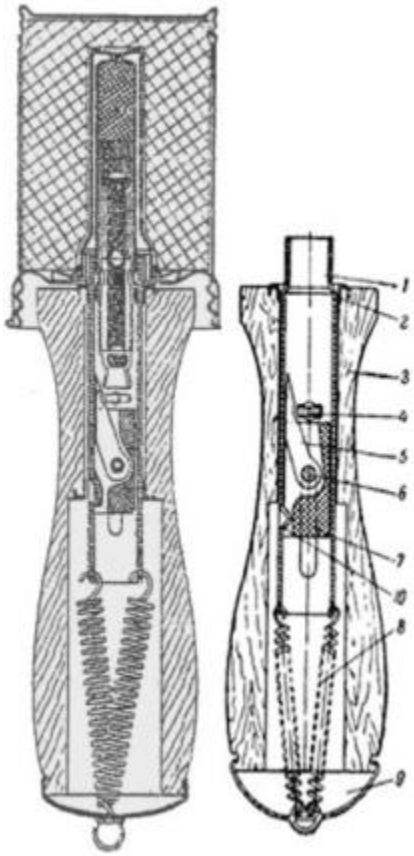 *cross-section of grenade 42 M*
 grenade 42 M		

FWP Ammunition

167

AMMUNITION FAMILY HEM

AMMUNITION TYPE	***Hand Grenade***
DESIGNATION	***Anti-personnel Fragmentation Hand Grenade Defensive in a Plastic Body***
NAME/ASSIGNED MARK (original)	***M 75***
COUNTRY of ORIGIN	*Former Yugoslavia*

M 75	
total weight of grenade with detonators and transport safety device [*kg*]	*0.340*
explosive type	*NITROPENTA - TETRYL*
weight of explosive [*kg*]	*0.045*
diameter (mm)	*58*
height of body [*mm*]	*89*
dimension of pressure plate [*mm*]	
activation force (greater than) [*N*]	
effect of grenade	*fragmentation up to 10 m*
type of central fuze	*CP-6*
type of additional (anti-lift) fuze	

PACKING

Number of rounds in the package		**Weight of full package [*kg*]**	

DESCRIPTION

Antipersonnel fragmentation defensive hand grenade M 75 was developed and produced in former Yugoslavia. The grenade is a copy of the Austrian grenade ARGES 73. Grenades were packing in a plastic box. Grenade has plastic body with inner grooves and fragments, steel balls (about 3 000 pcs) with a diameter approx. 1.5 mm. Fuze has time delay mechanism from 3.2 to 4.5 seconds.

COLOR and MARKING

Body colour:	*olive green (khaki)*
Text colour:	*black*

FUZE

Type	**Characteristic**
CP-6	*Mechanical lever (hammer), with time delay 3.2 – 4.5 sec*

SAFETY CONSIDERATION THREAT

Simple removal of grenade is very dangerous.

NOTICE

Used unexploded grenade is dangerous. Do not lift, roll or slide.

DRAWINGS/CUTAWAY/MARKING/STENCILING:		LEGEND
grenade M 75	*cross-section of grenade M 75*	*1 - grenade body; 2 - steel balls; 3 – explosive charge; 5 - detonator; 6 – delaying element; 7- fuze; 8 - safety handle; 9 – fuze spoon;*
Grenade M 75 - Yugoslavian version of grenade ARGES 73 with plastic box	*grenade M 75 with plastic box*	
grenade M 75	*cross-section of grenade M 75*	

FWP Ammunition

168

***AMMU*NITION FAMILY HEM**

AMMUNITION TYPE	***Hand Grenade***
DESIGNATION	***Anti-personnel Fragmentation Defensive Hand Grenade in a Metal Body***
NAME/ASSIGNED MARK (original)	***M50P3***
COUNTRY of ORIGIN	*Former Yugoslavia*

M50P3	
total weight of grenade with detonators and transport safety device [*kg*]	*0.55*
explosive type	*PETN/ TNT*
weight of explosive [*kg*]	*0.055*
diameter (mm)	*56*
height of body [*mm*]	*120*
dimension of pressure plate [*mm*]	
activation force (greater than) [*N*]	
effect of grenade	*fragmentation up to 20 m*
type of fuze	PU, M69,
type of additional (anti-lift) fuze	

PACKING

Number of rounds in the package		**Weight of full package [*kg*]**	

DESCRIPTION

Antipersonnel fragmentation defensive hand grenade M50P3 was developed and produced in former Yugoslavia. The body is made from cast iron, two half eggs are welded together. The body has internal serration. The grenade was used mainly during the Balkan conflict. The grenade is from the family of Yugoslavian hand grenades M52 (P1,P2,,..) and M50 (P1,P2,P3). There are only small differences between these types of grenades (dimensions, fuze,..).

M 560COLOR and MARKING

Body colour:	*olive green (khaki)*
Text colour:	*black*

FUZE

Type	**Characteristic**
PU, M69	*Mechanical lever (hammer) with delay 3.5-4 s.*

SAFETY CONSIDERATION THREAT

Simple removal of grenade is very dangerous.

NOTICE

Used unexploded grenade is dangerous. Do not lift, roll or slide.

DRAWINGS/CUTAWAY/MARKING/STENCILING:		LEGEND
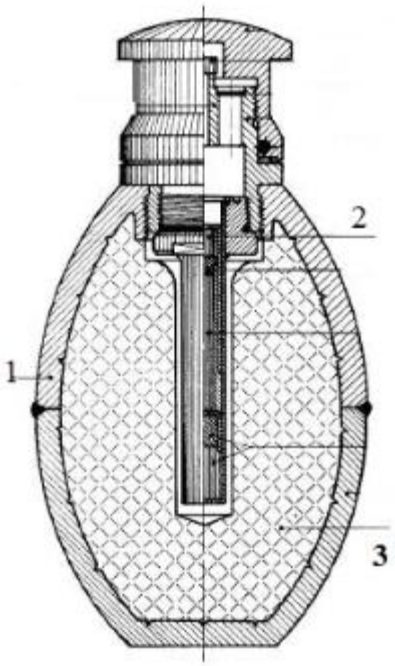 *hand grenade M50P2*	 *grenade M50P3*	*1 - grenade body; 2 - fuze;* *3 – explosive charge* *4 -marking - name, lot and year of manufacture*
 hand grenades M50P3, M50P2 and M50P1		

FWP Ammunition

169

***AMMU*NITION FAMILY HEM**

AMMUNITION TYPE	***Hand Grenade***
DESIGNATION	***Anti-personnel Fragmentation Hand Grenade - Offensive in a Metal Body***
NAME/ASSIGNED MARK (original)	***M 52P1 (M 52P2; M 52P3)***
COUNTRY of ORIGIN	***Former Yugoslavia***

M 52P1 (M 52P2; M 52P3)	
total weight of grenade with detonators and transport safety device [*kg*]	*0.550*
explosive type	*TNT*
weight of explosive [*kg*]	*0.050*
diameter (mm)	*57*
height of body [*mm*]	*108 (version M 52P2; M 52P3 -115)*
dimension of pressure plate [*mm*]	
activation force (greater than) [*N*]	
effect of grenade	*fragmentation up to 20 m*
type of fuze	*CP-6 or type OUCHON*
type of additional (anti-lift) fuze	

PACKING

Number of rounds in the package		**Weight of full package [*kg*]**	

DESCRIPTION

The antipersonnel fragmentation offensive hand grenades M52P1, M52P2 and M52P3 were developed and produced in former Yugoslavia. The basic model grenade "M 52" consists of a cast iron body with inner grooves, explosive charge and fuze. The upper part of the body has a hole for screwing the fuze together with detonator. In addition, the basic model M 52 was modifying to these grenades "M 52 P1", "M 52 P2", "M 52 A3". They differ from the "M 52" with some dimensions and type of the fuze. They are copies of grenades series M 50, main difference is casted (not welded) body.

COLOR and MARKING

Body colour:	*green - olive*
Text colour:	*Light green or yellow*

FUZE

Type	**Characteristic**
CP-6 or type OUCHON	*Mechanical, time delay*

SAFETY CONSIDERATION THREAT

Simple removal of grenade is very dangerous.

NOTICE

Used unexploded grenade is dangerous. Do not lift, roll or slide.

DRAWINGS/CUTAWAY/MARKING/STENCILING:	LEGEND
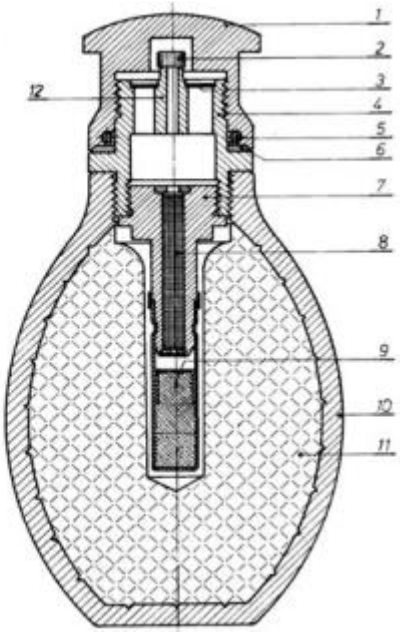 *Grenade and cross-section M 52*	**Grenade** *M 52* *1 - the fuze cover;* *2 - striker,* *4 - igniter mechanism;* *8 - delay mixture;* *9 - detonator No. 8,* *10 - body,* *11 – explosive charge.*
M52 P1, *M52 P2,* *M52 P3*	

FWP Ammunition

170

***AMMU*NITION FAMILY HEM**

AMMUNITION TYPE	***Hand Grenade***
DESIGNATION	***Antipersonnel Fragmentation Hand Grenade Offensive in a Metal Body***
NAME/ASSIGNED MARK (original)	***M 69***
COUNTRY of ORIGIN	*Former Yugoslavia*

M 69	
total weight of grenade with detonators and transport safety device [*kg*]	*0.60*
explosive type	*TNT pressed*
weight of explosive [*kg*]	*0.090*
diameter (mm)	*54*
height of body [*mm*]	*105*
dimension of pressure plate [*mm*]	
activation force (greater than) [*N*]	
effect of grenade	*fragmentation up to 20 m*
type of fuze	*PU M-69*
type of additional (anti-lift) fuze	

PACKING

Number of rounds in the package		**Weight of full package [*kg*]**	

DESCRIPTION

Antipersonnel fragmentation offensive hand grenade M 69 was developed and produced in former Yugoslavia. This grenade is identical to the M50P2 and M52P2, but equipped with a modernized fuze the PU M-69. The body grenade was marked as a previous model M50P2 or M52P2, but the fuze was marked on the top of its protective cap as M-69. Factory RZK (REMONTNI ZAVOD KRAGUJEVAC) replaced old M-50 fuzes on M-50 and M-52 grenades with this new fuze PU M-69. These modernized grenades with the new fuze were called M50P2 and M52P2.The project of modernizing M-52 grenades with the new fuze started in RZK factory in 1969, so they called that modernized grenade M-69, M50P2 and M52P2 represent the same grenade.

COLOR and MARKING

Body colour:	*green - olive*
Text colour:	*white*

FUZE

Type	**Characteristic**
PU M-69	*Mechanical, with delay time 3.2 – 5 s*

SAFETY CONSIDERATION THREAT

Simple removal of grenade is very dangerous.

NOTICE

Used unexploded grenade is dangerous. Do not lift, roll or slide.

DRAWINGS/CUTAWAY/MARKING/STENCILING:	LEGEND
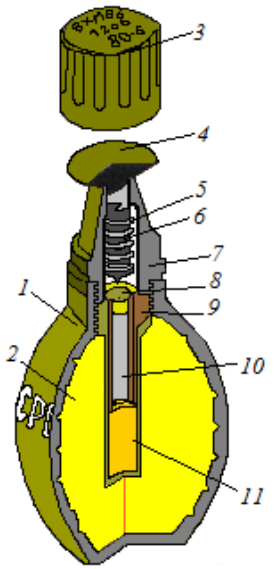 *cross-section grenade M69*	*<u>Construction of grenade</u>* *1 - grenade body; 2 – explosive charge; 3 – fuze protective cap; 4 - mushroom - firing mechanism; 5 – striker; 6 – striker spring , 7 - fuze body; 8 - Ignition primer; 10 - delay pyrotechnic mixture ; 11 - detonator.*
 M69	 *grenade M69*

FWP Ammunition

171

***AMMU*NITION FAMILY HEM**

AMMUNITION TYPE	*Land Mine*
DESIGNATION	*Anti-Tank Blast Training Mine in a Metal Body*
NAME/ASSIGNED MARK (original)	***UITM -60***
COUNTRY of ORIGIN	*Former USSR*

UITM -60

total weight of mine with detonators and transport safety device [*kg*]	*8.7*
explosive type	*pyrotechnic mixture*
weight of explosive [*kg*]	-----
diameter [*mm*]	*320*
height of body [*mm*]	*125*
dimension of pressure plate [*mm*]	
activation force (greater than) [*N*]	*2000 - 6000*
effect of mine	
type of fuze	*training fuze UIMV-60, electric initiator AZ-60*
type of additional (anti-lift) fuze	

PACKING

Number of rounds in the package	*4*	**Weight of full package [*kg*]**	*43.8*

DESCRIPTION

Antitank training imitation mine UITM-60 was developed and produced in former USSR. This mine is resembles to the conventional metallic antitank mines such as the TM-46 and TM-57, can be laid mechanically and used repeatedly. The mine consists of the container, lid, connecting ring, UIMV-60 fuze, signal cartridge, sleeve for attaching transverse fuzes of wires for electrical activation of the mine, three supports, handle, ball-type safety, and three support springs.

A screwed fuze well is located in the middle of the lid. When a tank track hits the lid of the mine, the springs are compressed, allowing the lid to descend until the stopper of the UIMV-60 fuze contacts the base of the mine case. At this point, the copper safety pins break, the retaining balls roll out, and the firing pin is freed to hit the percussion cap thus starting the explosive train. The explosive train has a 3- to 4-second delay, which normally allows it to function after the mine has been rolled over by a tank. After the delay, a signal cartridge (two red and two green flares) is ejected 10 to 40 meters into the air. The mine can also be operated electrically with an electric detonator.

COLOR and MARKING

Body colour:	*Olive or black*
Text colour:	*Black or white*

FUZE

Type	**Characteristic**
UIMV-60	*training fuze type "flash - smoke", mechanical, pressure, contact*
AZ-60	*electric initiator AZ-60,*

SAFETY CONSIDERATION THREAT

N/A

NOTICE

N/A

DRAWINGS/CUTAWAY/MARKING/ STENCILING:	LEGEND
	1 - body of the mine, 2 - plug , 3 - handle ; 4 - the vent; 5 – fuze UIMV - 60; 6 - firing mechanism exploder SP -60 (signal cartridge) ; 7 - flat spring ; 8 – initiator; 9 - spring; 10 - steel ball ; 11 - diaphragm paper ; 12 - electric detonator AZ- 60; 13 - diaphragm paper ; 14 - rubber gasket ; 15 - fuze bead; 16 – initiator cover ; 17 – exploder SP-60 (signal cartridge) cover opener; 18 - exploder SP-60 (signal cartridge) cover; 19 - fuze UIMV-60, 20 rubber gasket ; 21 – fuze well; 22 – pressure plate spring; 23 – pressure plate; 24 – electric connectors ; 25 – pressed ignition mixture; 26 - membrane - waxed paper ; 27 - seal ; 28 – ignition mixture ; 29 - electric initiator AZ -60 body; , 30 – electric initiator AZ-90 well ; 31 - electric wires ; 32 - blasting fuze connector plug; 33 – blasting fuze connector ; 34 - blasting fuze ; 35 - input jack in the body of the mine ; 36 - body of the mine ; 37 - fuze UITM – 60; 38 - detonating cord (cord - PETN phlegmatized) 38 – detonating cord connector ; 40 - insert powder; 41 - primer; 42 – ejecting charge; 43- cylinder aluminum oxide ; 44 - spacers paper; 45 – signal flare; 46 - spacers paper; 47 - igniter ; 48 – exploder SP-60 (signal cartridge) body - waxed paper ; 49 - rubber membrane ; 50 – striking pin spring ; 51 – striking pin , 52 - exploder SP-60 (signal cartridge) cover opener 53 - internal fuse body - bakelite ; 54 – exploder SP- 60; 55 – striking pin bead; 56 - firing mechanism body - brass ; 57 – marking - index of mine (black on white background or white) - the type of mines ; 58 – marking the producer of mine; 59 – marking the lot of mine production; 60 – marking the year of mine production manufacture of mine;
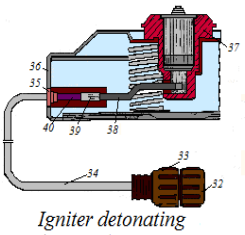 *Igniter detonating (igneous) UAW-60* 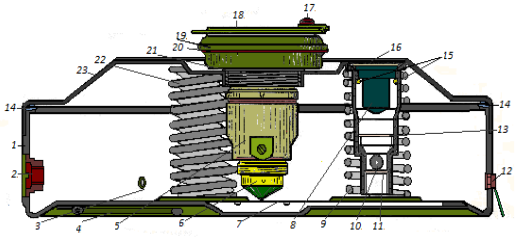 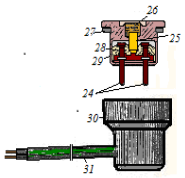 *Electric detonator AZ-60* 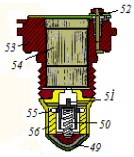 *Fuze UIMW-60 of exploder SP-60* 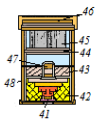 *Exploder SP-60*	

FWP Ammunition

172

***AMMU*NITION FAMILY HEM**

AMMUNITION TYPE	*Land Mine*
DESIGNATION	*Anti-personnel Blast Mine in a Plastic Body*
NAME/ASSIGNED MARK (original)	***PP Mi-Na 1***
COUNTRY of ORIGIN	*former Czechoslovakia*

PP Mi-Na 1	
total weight of mine with detonators and transport safety device [*kg*]	*0.175*
explosive type	*TNT*
weight of explosive [*kg*]	*0.102*
width of body (mm)	*71.5*
length of body (mm)	*91.5*
height of body (mm)	*47*
dimension of pressure plate [*mm*]	
activation force greater than [*N*]	*from 50 to 250*
effect of mine	*up to 1 m.*
type of fuze	*integrated with the mine*
type of additional (anti-lift) fuze	

PACKING

Number of rounds in the package	*100*	**Weight of full package [*kg*]**	*20*

DESCRIPTION

Antipersonnel blast mine PP Mi-Na 1 was developed and produced in former Czechoslovakia. The mine was intended to use against manpower and wheeled vehicles. The mine can be placed mechanically or manually. Mine has only small resistance to blast (shock wave). Mine has integrated fuze.

COLOR and MARKING

Body colour:	*Olive*
Text colour:	*Black*

FUZE

Type	**Characteristic**
integrated	*mechanical, contact, pressure*

SAFETY CONSIDERATION THREAT

Simple removal of mine is very dangerous.

NOTICE

Mine is very dangerous. Destroy on place. Do not touch, roll or move.

DRAWINGS/CUTAWAY/MARKING/STENCILING:		LEGEND
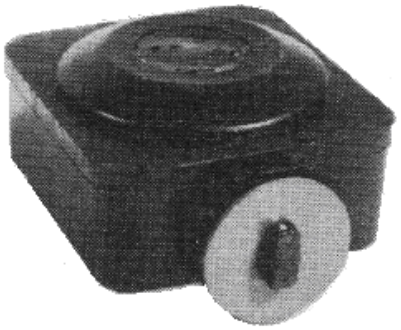 *mine PP Mi-Na 1*	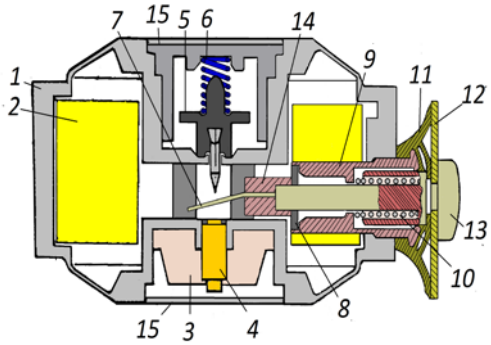 *section of mine PP Mi-Na 1*	*1 body of mine; 2 - explosive charge; 3 - booster charge; 4 - detonator; 5 - striker; 6 – striker spring 7 - safety plunger; 8 - safety pin; 9 – safety device body;* *10 – safety device spring; 15 - activation surfaces*
 mine PP Mi-Na 1	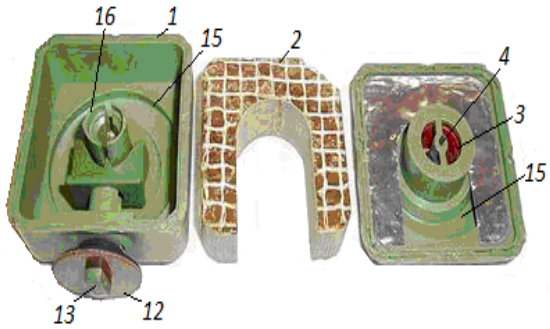 *basic elements of mine PP Mi-Na 1*	
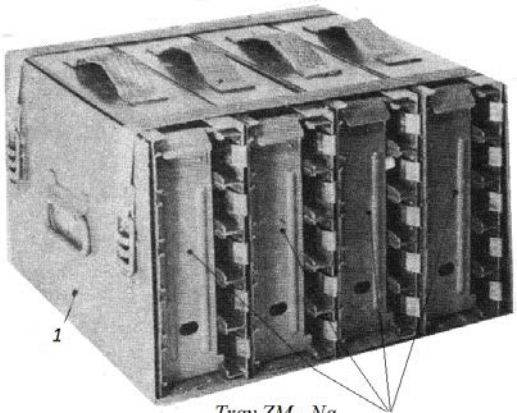 *Tray ZM - Na* *1 - carrying case* *2- Trays ZM-Na-1*	 *tray ZM-Na 1 mines for 50 pcs PP Mi-Na 1*	

(INTENTIONALLY BLANK)

Tittle:	Former Warsaw Pact Ammunition Handbook – VOL 1 PART II Land Forces Ammunition – Mines, Explosives, Submunition and Grenades
Author & Publisher	Explosive Ordnance Disposal Centrum of Excellence
Managing editor	LTC (ret.) Marian MJARTAN
Range	353 pages
Edition	First (Part II)
Imprint date	Jun 2016

ISBN 978-80-89261-56-7
9 788089 261567